e-Front runners

G-TWIN STANDARD

G-TWIN STANDARD

G-TWIN STANDARD

G-TWIN GLOBAL

G-TWIN GLOBAL

G-TWIN GLOBAL

MOLDED CASE CIRCUIT BREAKERS

AIR CIRCUIT BREAKERS

LOW VOLTAGE EQUIPMENT
Up to 600 Volts

ACB DH series

Handle-operated type

Distribution breakers F series

INDIVIDUAL CATALOG 06

from D&C CATALOG 20th Edition

01 02 03 04 05 06 07 08 09 10 11 12

Fuji Electric FA Components & Systems Co., Ltd.

The Twin Breakers have advanced to an entirely new stage.

Conforming to IEC & local Standards

Conforming to certifications and standards in major world markets

Expanded frame sizes in G-TWIN Global Series

G-TWIN
Standard series
MCCB

G-TWIN
Global series
MCCB

Compact & High performance

Compact models with unified dimensions meeting UL489 480V and IEC 440V requirements

GLOBAL TWIN History

1990 TWIN Breaker

1992 Super TWIN

1995 Super 60

2001 α-TWIN

2006 G-TWIN

FUJI MCCB and ELCB

GLOBAL TWIN

Ecology

Lower environmental impact
Advanced green engineering and energy-saving support
Conforming to the RoHS Directive

G-TWIN
Standard series
MCCB

G-TWIN
Global series
MCCB

Usefulness

Leading the way in user-friendliness

Fuji Electric launched the Twin Breaker Series to world markets in 1990, in which molded case circuit breaker (MCCB) and earth leakage circuit breaker (ELCB) types were unified in external dimensions for the first time in the world. The Twin Breaker Series was highly evaluated and gained strong support, and the concept of Twin Breakers was established as Japan's de facto standards for MCCBs and ELCBs.

In 1992, Fuji Electric released the Super Twin Breaker Series, which enabled user installation of internal accessories for the first time in Japan.

In 1995, Fuji Electric released the Super 60 Series and advanced modularization via uniform external dimensions. In 2001, Fuji Electric launched the α-Twin Series to further advance the miniaturization and modularization of economic types with 100A frame or less as Japan's first multi-standard circuit breakers satisfying domestic and international standards. Since then, Fuji Electric has been making further product improvements by predicting market trends.

In recent years, market globalization has increasingly accelerated.

At the end of 2004, the Japanese Industrial Standards (JIS) were aligned with the IEC standards, and the globalization in this field has been further accelerated.

Based on the Twin Breaker Series, Fuji Electric has expanded the range of its products conforming to and approved by international standards for global markets, always advanced the innovative development of fundamental technologies in response to the market demand, and developed the G-TWIN Series of MCCBs and ELCBs.

GLOBAL-TWIN

Conforming to IEC & local Standards

The G-TWIN series is a global breaker series that satisfies all major standards.

IEC
IEC 60947-2

EN
Europe

Europe
EN 60947-2

GB
China

China
GB 14048.2

JIS
Japan

JIS C 8201-2-1	MCCB
JIS C 8201-2-2	ELCB

CE model

- EN 60947-2
- JIS C 8201-2-1
- JIS C 8201-2-2
- CE marking (TÜV)

α-TWIN

CCC model

- GB 14048.2 (China)
- CCC approved

α-TWIN

JIS model

- JIS C 8201-2-1
- JIS C 8201-2-2

α-TWIN

CE marking (TÜV) + CCC approved + JIS

G-TWIN Standard series

- IEC 60947-2
- EN 60947-2 (CE marking)
- GB 14048.2 (CCC)
- JIS C 8201-2-1
- JIS C 8201-2-2

Ampere frame size (AF)

32	50	63	100	125	160	250	400	630	800

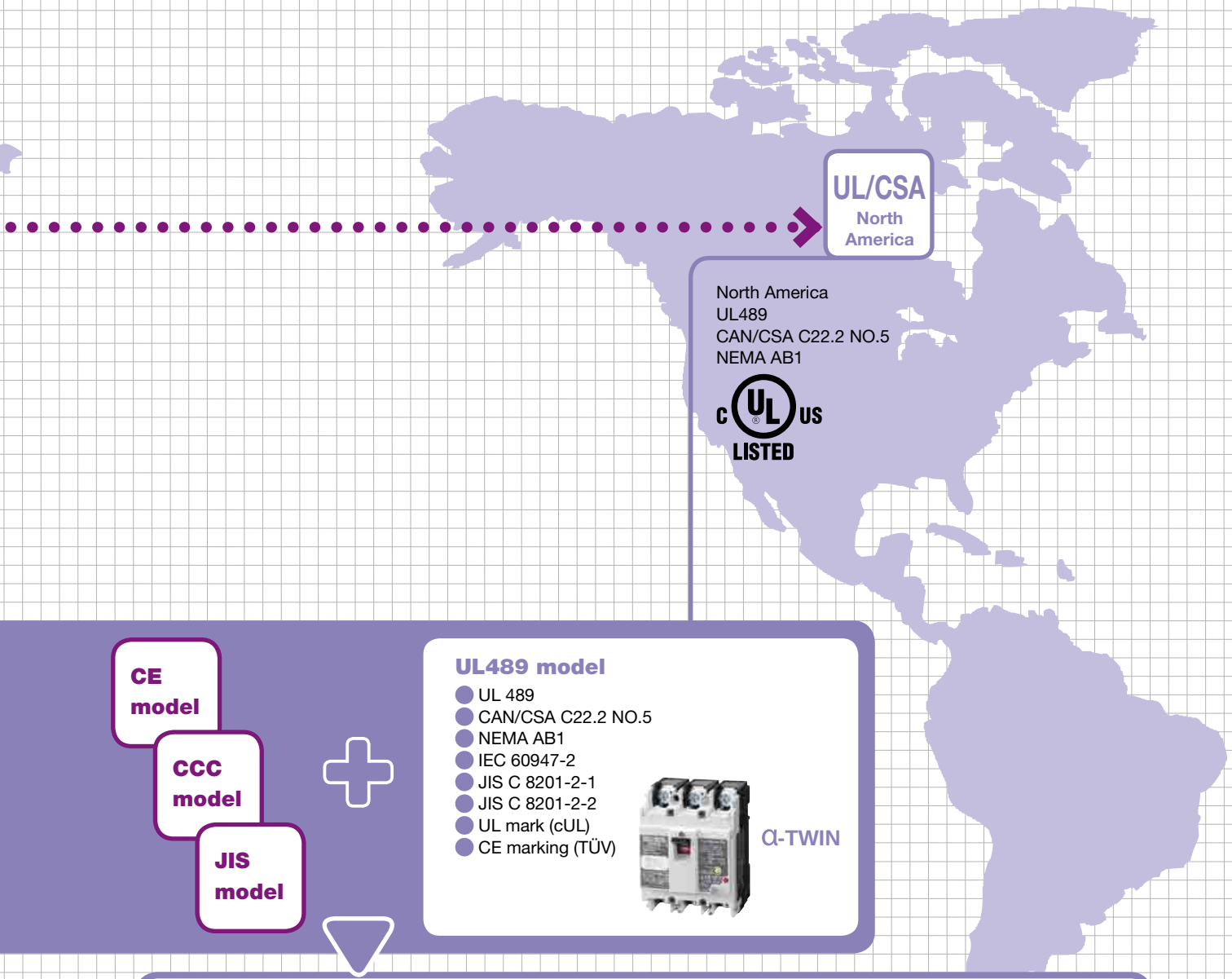

UL/CSA
North America

North America
UL489
CAN/CSA C22.2 NO.5
NEMA AB1

c UL us
LISTED

CE model

CCC model

JIS model

UL489 model

- UL 489
- CAN/CSA C22.2 NO.5
- NEMA AB1
- IEC 60947-2
- JIS C 8201-2-1
- JIS C 8201-2-2
- UL mark (cUL)
- CE marking (TÜV)

α-TWIN

UL mark (cUL) + CE marking (TÜV) + CCC approved + JIS

G-TWIN Global series

- IEC 60947-2
- EN 60947-2 (CE marking)
- GB 14048.2 (CCC)
- JIS C 8201-2-1
- JIS C 8201-2-2
- UL 489
- CAN/CSA C22.2 NO.5
- NEMA AB1

Ampere frame size (AF)

50	100	125	250	400	630	800

GLOBAL-TWIN

Compact models with unified dimensions
meeting UL489 480V and IEC 440V requirements

Compact & High performance

Compact size meeting UL489 480V requirements

Current model

Rated voltage 480V
BU3JLC
(W105 x H256 x D103 mm)

(250AF)

Rated voltage 480V
BW250RAGU
(W105 x H181 x D68 mm)

(250AF)

480V Volume ratio - 53%!

Technical innovation

Arc and gas flow control technology

Effect of "ablation breaking technology"

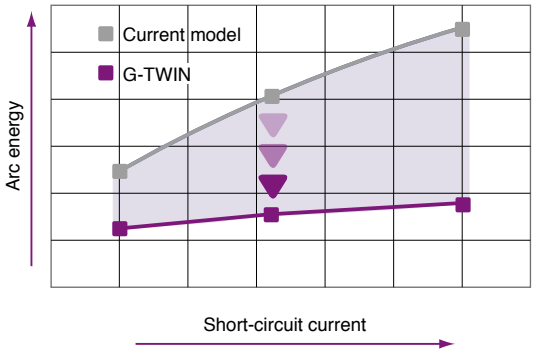

Decrease by 30%!

Moving contact cover
- Arcing prevention at the bottom of moving contact

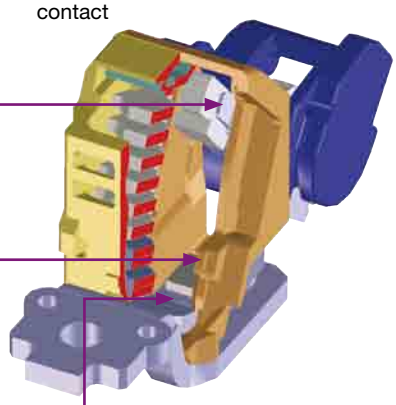

Narrow slit resin
- Increased arc voltage due to narrow slit effect
- Increased arc voltage and high-speed moving contact opening by ablation effect
- Suppression of internal pressure rise by adjusting the narrow slit width

Magnetic yoke arrangement
- An increase in the repulsion force of the moving contact at initiation of contact opening

Ecology

Advanced environmental technology
Conforming to the RoHS Directive

The G-TWIN Series is designed to lower environmental impact.

Recycling
- For easier recycling, all major parts are marked with the names of the materials used.

Conforming to the RoHS Directive
- Lead-free (Pb-free) solder is used.
- Free of hexavalent chromium (Cr^{6+}-free) (125 to 800AF)

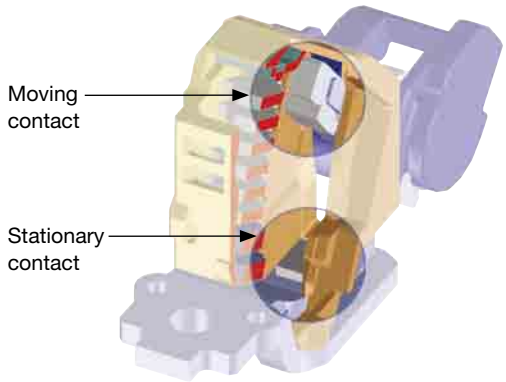

Cadmium-free contact material

Usefulness

Leading the way in user-friendliness

Unifying and reducing the types of internal accessories

32~100AF

- Internal and external accessories
  A wider range of customer-mountable accessories

MCCB

Shunt trip device

Undervoltage trip device

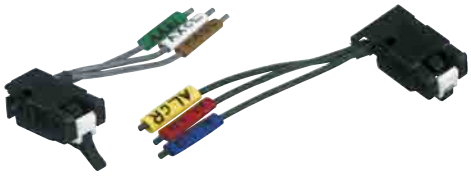
Auxiliary switch

Alarm switch

125~250AF

- Sharing internal accessories of 125/160/250AF breakers.

Number of types of internal accessories

AF	α-TWIN	G-TWIN
125	8	8
160/250	8	

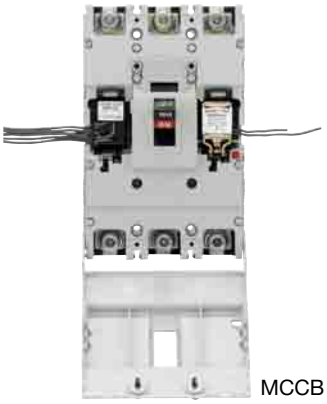
MCCB

Shunt trip device

Undervoltage trip device

Auxiliary switch

Alarm switch

400~800AF

- The number of types of internal accessories of 400/630/800AF has been significantly reduced.

Number of types of internal accessories

AF	α-TWIN	G-TWIN
400	26	6
630		
800		

MCCB

Shunt trip device

Undervoltage trip device

Auxiliary switch

Alarm switch

Type of MCCBs

■Type of MCCBs

G-TWIN Series

Line protection	Page	Feature	Type
	06/04	· Models from 3A to 800A · Conforming to international standard IEC/EN(CE)/GB(CCC)/JIS · Most accessories can be installed by the user.	BW ① ② A G- ③ ④ ①AF: 32, 50, 63, 100, 125, 160, 250, 400, 630, 800 ②Breaking capacity: A, E, J, S, R, H ③Pole: 2P, 3P, 4P ④Rated current: 003, ·, ·, ·, 800

Motor-protection	Page	Feature	Type
	06/18	· Models from 0.7A to 225A · Line & Motor protection · Conforming to international standard IEC/EN(CE)/GB(CCC)/JIS	BW ① ② A M- ③ ④ ①AF: 32, 50, 63, 100, 125, 250 ②Breaking capacity: E, J, S, R ③Pole: 2P, 3P ④Rated current: 0P7, ·, ·, ·, 225

UL489Listed	Page	Feature	Type
	06/13	· Models from 3A-800A · Conforming to international standard UL/CSA/IEC/EN(CE)/GB(CCC)/JIS	BW ① ② A GU- ③ ④ ①AF: 50, 100, 125, 250, 400, 630, 800 ②Breaking capacity: E, J, S, R, H ③Pole: 2P, 3P ④Rated current: 003, ·, ·, ·, 800

BW0 Series

Line protection	Page	Feature	Type
	06/96	· Compact: depth 60mm · Cassette: All accessories can be assembled by user. · Global: Conforming to IEC/EN(CE) standard.	BW ① ② ③ 0/ ④ ①AF: 10:100AF, 16:160AF, 25:250AF ②Breaking capacity: E, J, S ③Pole: 2:2P, 3:3P ④Rated current: 15, ·, ·, ·, 250

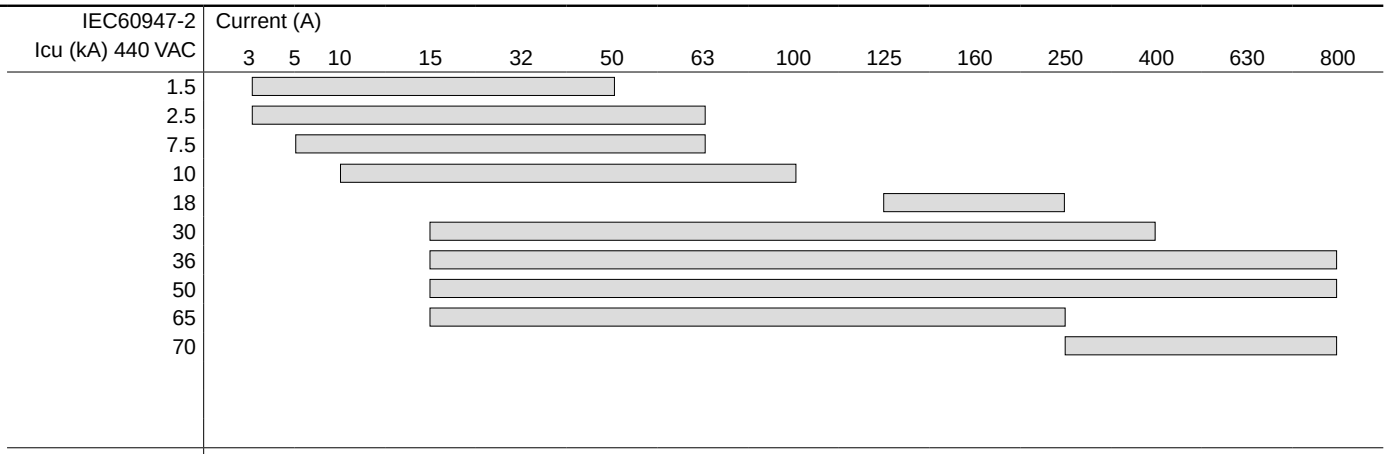
IEC60947-2
Icu (kA) 440 VAC
Current (A)
3 5 10 15 32 50 63 100 125 160 250 400 630 800
1.5
2.5
7.5
10
18
30
36
50
65
70

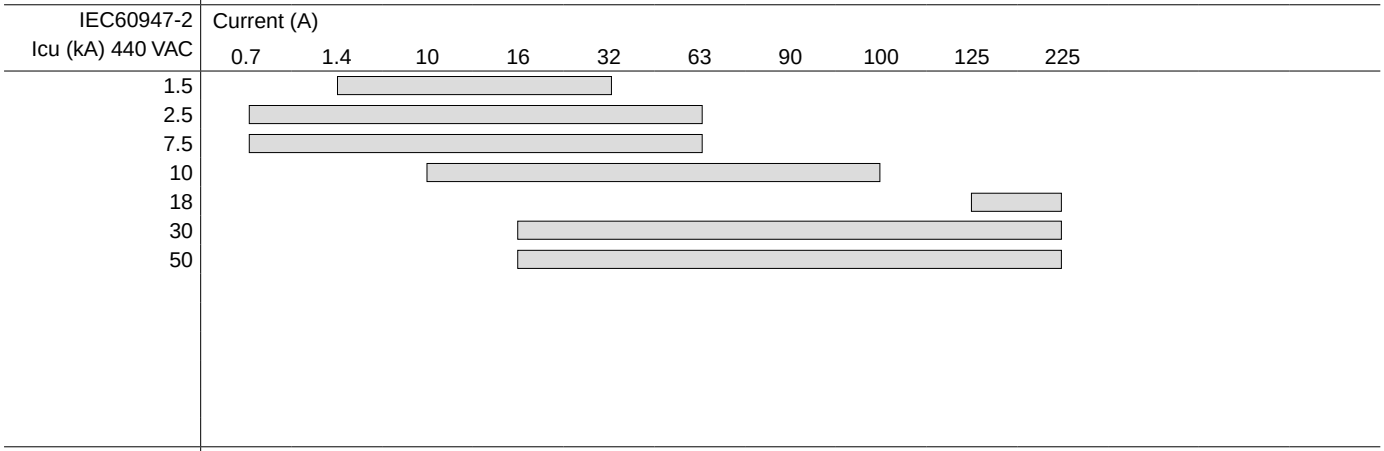
IEC60947-2
Icu (kA) 440 VAC
Current (A)
0.7 1.4 10 16 32 63 90 100 125 225
1.5
2.5
7.5
10
18
30
50

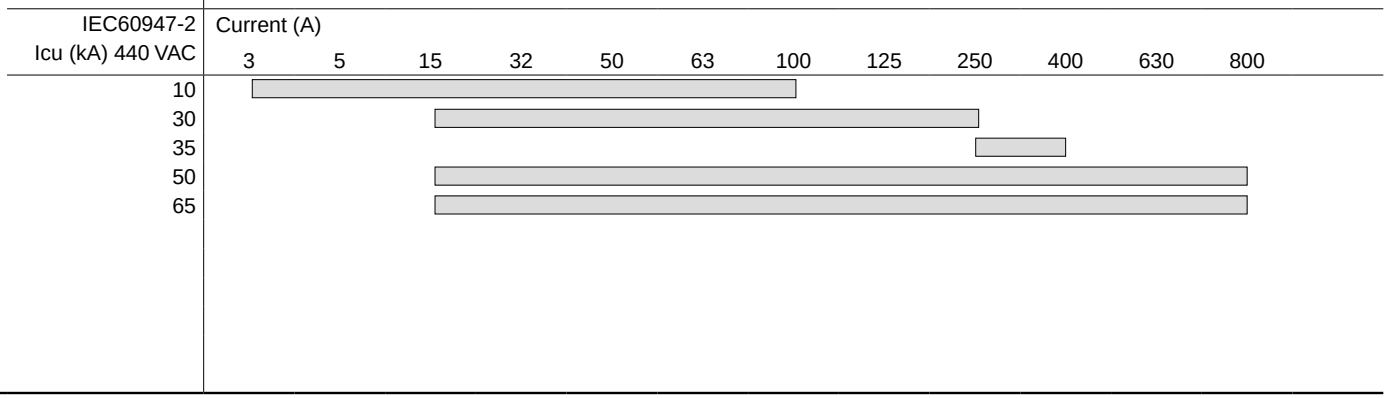
IEC60947-2
Icu (kA) 440 VAC
Current (A)
3 5 15 32 50 63 100 125 250 400 630 800
10
30
35
50
65

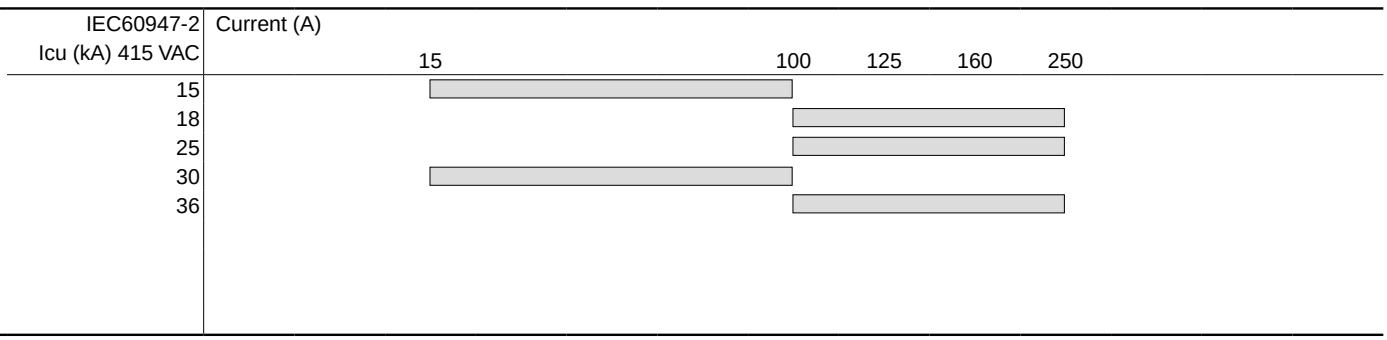
IEC60947-2
Icu (kA) 415 VAC
Current (A)
15 100 125 160 250
15
18
25
30
36

Type of MCCBs

H Series

Line protection	Page	Feature	Type
	06/111	· Models with high breaking capacities from 5 to 800A	H ① ② ③ / ④ ①AF: 5:50AF, 10:100AF, 20:225AF, 40:400AF, 60:600AF, 80:800AF ②Pole: 2:2P, 3:3P ③Breaking capacity: BA, R ④Rated current: 10 ⋮ 800

Motor-protection	Page	Feature	Type
	06/114	· High breaking capacity model of 16 to 45A · Line and Motor protection	H53BAM/ ① ① Rated current: 16 ⋮ 45

Solid-state trip types

SA-E series	Page	Feature	Type
	06/148	· Equipped with a load current pre-trip alarm · Adjustable rated current · wide-range-adjustable trip characteristics	SA ① ② E/ ③ ①AF: 100:1000AF, 120:1200AF, 160:1600AF ②Pole: 3:3P, 4:4P ③Rated current: 500 ⋮ 1600

Distribution breaker

F seriies	Page	Feature	Type
	06/165	· Used for protection of lighting and heating branch circuit	F ① ② B/ ③ ①AF: 5:50AF, 10:100AF ②Pole: 1:1P, 2:2P, 3:3P ③Rated current: 15 ⋮ 100

DH series

ACB	Page	Feature	Type
	06/172	· Standardized basic dimensions · Small and high performance · Same panel cutout size in all models · Equipped with multi-function protective device	DH ① ② ③ ④ ①AF: 08:800AF, 12:1200AF, 16:1600AF, 20:2000AF, 25:2500AF, 30:3000AF, 40:4000AF, 50:5000AF, 60:6300AF ②Pole: 3:3P, 4:4P ③Rated current Breaking capacity class: (Blank), H, P

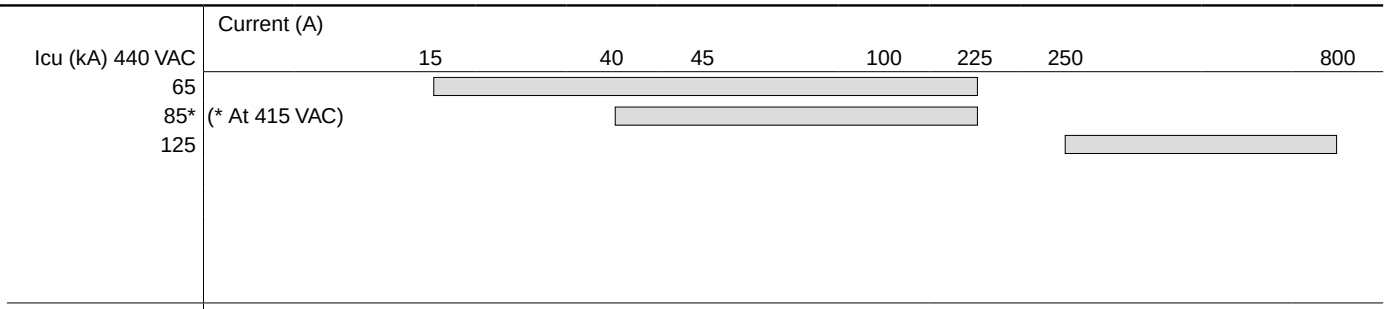
Current (A)
Icu (kA) 440 VAC
15
40
45
100
225
250
800
65
85*
(* At 415 VAC)
125

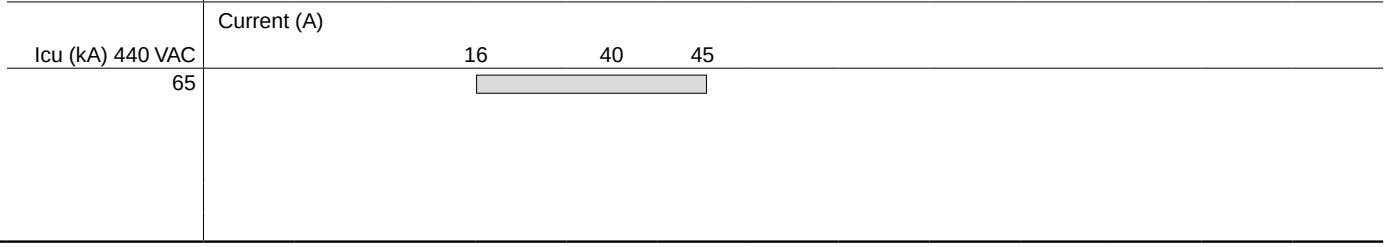
Current (A)
Icu (kA) 440 VAC
16
40
45
65

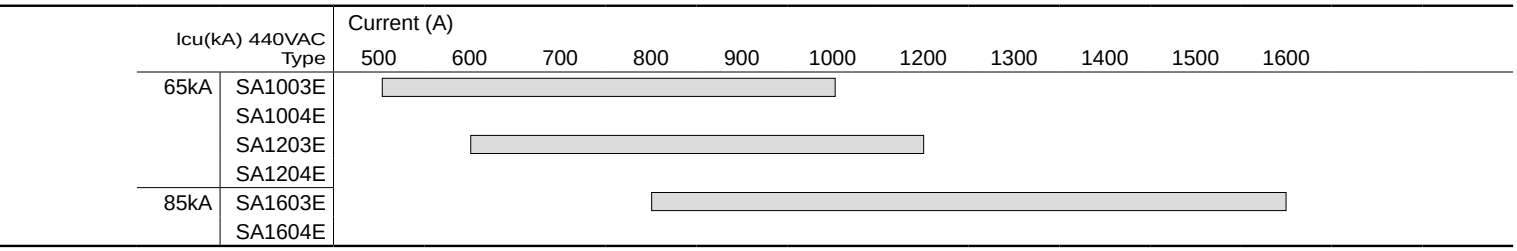
Icu(kA) 440VAC
Type
Current (A)
500
600
700
800
900
1000
1200
1300
1400
1500
1600
65kA
SA1003E
SA1004E
SA1203E
SA1204E
85kA
SA1603E
SA1604E

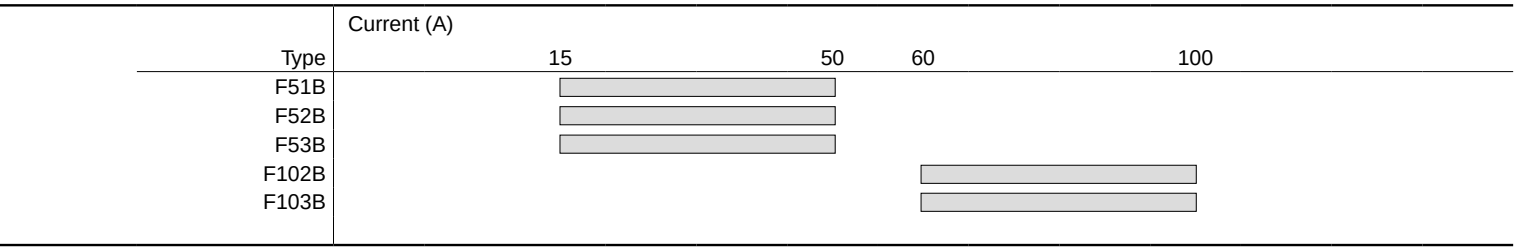
Current (A)
Type
15
50
60
100
F51B
F52B
F53B
F102B
F103B

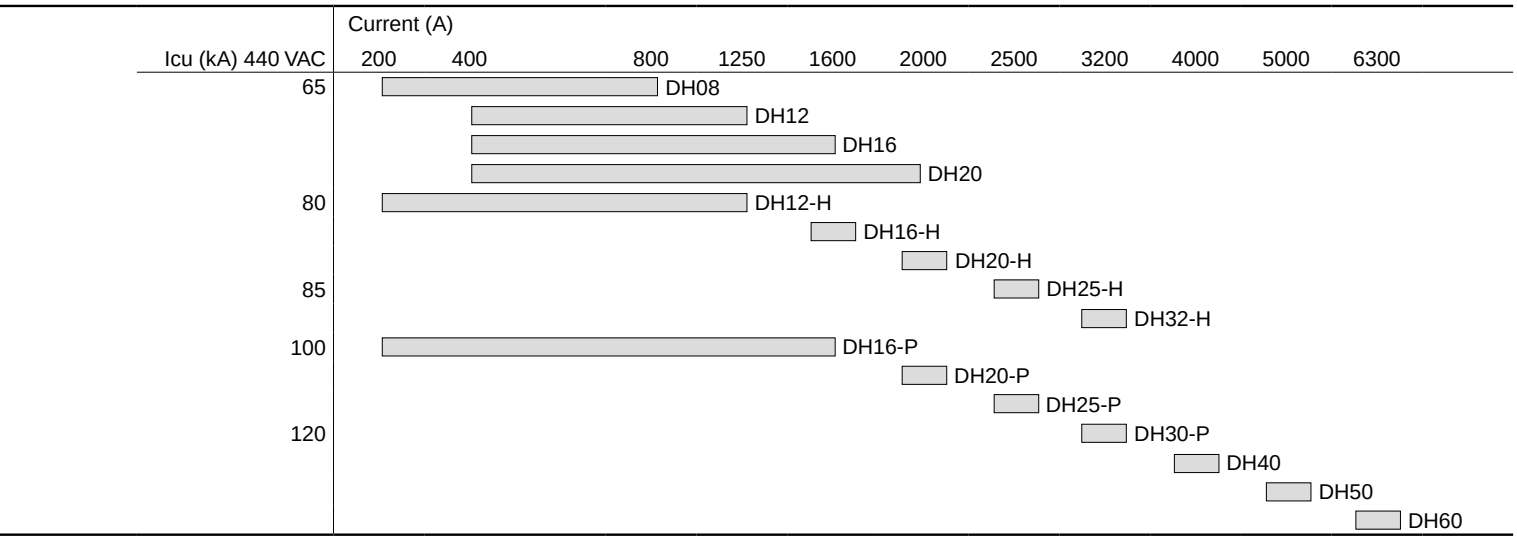
Current (A)
Icu (kA) 440 VAC
200
400
800
1250
1600
2000
2500
3200
4000
5000
6300
65
DH08
DH12
DH16
DH20
80
DH12-H
DH16-H
DH20-H
85
DH25-H
DH32-H
100
DH16-P
DH20-P
DH25-P
120
DH30-P
DH40
DH50
DH60

06 Molded Case Circuit Breakers

Page

Molded Case Circuit Breakers

G-TWIN series
- List of products 06/1
- Type number nomenclature 06/2
- Quick reference guide 06/4
- Mounting modifications 06/22
- Terminal connection 06/24
- Wire size and terminal 06/25
- Type number 06/29
- Arc space 06/38
- Dimensions 06/39
- Characteristic curves 06/58
- Accessories 06/63

BW0 series
- General information 06/94
- Breaking capacities 06/95
- Quick reference guide 06/96
- Terminal connection 06/99
- Dimensions 06/100
- Characteristic curves 06/102
- Internal accessories 06/104
- External accessories 06/107

H series
- General information 06/110
- Quick reference guide 06/111
- Mounting modifications 06/115
- Wire size and terminal 06/116
- Type number 06/117
- Dimensions 06/118
- Characteristic curves 06/123
- Accessories 06/125

Solid-state trip types
- Description 06/147
- Quick reference guide 06/148
- Protection function 06/149
- Terminal connection 06/151
- Internal accessories 06/152
- External accessories 06/156
- Characteristic curves 06/162
- Dimensions 06/163

Distribution breakers F series
- Description 06/165

Air Circuit Breakers

DH series
- General information 06/167
- Features 06/168
- Type number nomenclature 06/171
- Specifications and ratings 06/172
- Appearance / Internal construction 06/174
- Mounting / Connection methods 06/175
- Closing method 06/176
- Tripping devices 06/177
- Overcurrent trip device 06/179
- Supplied accessories 06/192
- Optional accessories 06/193
- Applicable maximum rated current by main circuit terminal connection 06/199
- Technical data 06/199
- Dimensions 06/202
- Wiring diagrams 06/214

MINIMUM ORDERS

Orders amounting to **less than ¥10,000** net per order will be charged as ¥10,000 net per order plus freight and other charges.

WEIGHTS AND DIMENSIONS

Weights and dimensions appearing in this catalog are the best information available at the time of going to press. FUJI ELECTRIC FA has a policy of continuous product improvement, and design changes may make this information out of date.
Please confirm such details before planning actual construction.

INFORMATION IN THIS CATALOG IS SUBJECT TO CHANGE WITHOUT NOTICE.

List of products

■ G-TWIN Standard Series (IEC/EN/GB/JIS conformed)

Line protection

AC415V Icu	BW32	BW50	BW63	BW100	BW125	BW160	BW250	BW400	BW630	BW800
1.5kA	AAG	AAG		AAG						
2.5kA	SAG	EAG	EAG							
7.5kA		SAG	SAG							
10kA		RAG	RAG	EAG						
18kA						EAG	EAG			
30kA					JAG	JAG	JAG	EAG		
36kA					SAG	SAG	SAG	SAG	EAG	EAG
50kA					RAG	RAG	RAG	RAG	RAG	RAG
65kA		HAG*			HAG*		HAG*			
70kA								HAG	HAG	HAG

Note: * There are no performance indications for GB standards for the BW50HAG, BW125HAG, and BW250HAG.

Motor protection

AC415V Icu	BW32	BW50	BW63	BW100	BW125	BW250
1.5kA	AAM					
2.5kA	SAM	EAM	EAM			
7.5kA		SAM	SAM			
10kA		RAM		EAM		
18kA						EAM
30kA					JAM	JAM
50kA					RAM	RAM

■ G-TWIN Global Series (IEC/EN/GB/JIS/UL/CSA conformed)

Line protection

AC415V Icu	BW50	BW100	BW125	BW250	BW400	BW630	BW800
10kA	RAGU	EAGU					
18kA				EAGU			
30kA			JAGU	JAGU	EAGU		
36kA					SAGU		
50kA			RAGU	RAGU	RAGU	RAGU	RAGU
70kA					HAGU	HAGU	HAGU

■ BW0 Series (IEC/EN/GB conformed)

Line protection

AC415V Icu	100AF	160AF	250AF
15kA	BW103E0		
18kA		BW162E0 BW163E0	BW252E0 BW253E0
25kA		BW162J0 BW163J0	BW252J0 BW253J0
30kA	BW102S0 BW103S0		
36kA		BW162S0 BW163S0	BW252S0 BW253S0

06

■ S, H Series

Line protection

AC415V Icu	50AF	100AF	225AF	400AF	600AF	800AF	1000AF	1200AF	1600AF
65kA	H52BA H53BA	H102BA H103BA	H202BA H203BA				SA1003E SA1004E	SA1203E SA1204E	
85kA		H103R	H203R						SA1603E SA1604E
125kA				H403R	H603R	H803R			

■ H Series

Motor protection

AC415V Icu	50AF
65kA	H53BAM

■ F Series

Distribution Breakers

AC240V Icu	50AF	100AF
3kA	F51B F52B F53B	F102B F103B

■ Type number nomenclature

BW 250 EA G □ - 3P 225 X

Series
BW: G-TWIN series MCCB

Frame size
32: 32AF 63: 63AF 125: 125AF 250: 250AF 630: 630AF
50: 50AF 100: 100AF 160: 160AF 400: 400AF 800: 800AF

Breaking capacity

	Rated breaking capacity Icu (440V AC)									
	32AF	50AF	63AF	100AF	125AF	160AF	250AF	400AF	630AF	800AF
AA	1.5kA	1.5kA	–	1.5kA	–	–	–	–	–	–
EA	1.5kA	2.5kA	2.5kA	10kA	–	18kA	18kA	30kA	36kA	36kA
JA	–	–	–	–	30kA	30kA	30kA	–	–	–
SA	2.5kA	7.5kA	7.5kA	–	36kA	36kA	36kA	36kA	–	–
RA	–	10kA	10kA	–	50kA	50kA	50kA	50kA	50kA	50kA
HA	–	65kA	–	–	65kA	–	65kA	70kA	70kA	70kA

Model
G: Line protection M: Motor protection

G-TWIN series
Blank: Standard U: Global

No. of poles
2P: 2-pole 3P: 3-pole 4P: 4-pole

Rated current
See page 06/29.

Terminal combination (Global type)

	Terminal position		Applicable breaker type		
Code	Line	Load	BW50	BW100, 125, 250	BW400, 630, 800
Blank	Screw	Screw	●	●	–
Blank	Flat teminal	Flat teminal	–	–	●
SB	Block terminal	Block terminal	–	●	●
SF	Flat teminal	Flat teminal	●	●	–
S3	Screw	Flat terminal	●	●	–
S4	Flat teminal	Screw	●	●	–
S5	Screw	Block terminal	–	●	–
S6	Block terminal	Screw	–	●	–
S7	Flat teminal	Block terminal	–	●	●
S8	Block terminal	Flat terminal	–	●	●

Mounting and connection
• Standard type
Blank: Front mounting front connection
X: Front mounting rear connection
E: Flush mounting rear connection
Y: Flush mounting , top & buttom connection
P: Plug-in mounting

W K F□ R□ A Q2 M□ UC

Enclosure
UC: Standard
UV: Dust-proof (IP40)
UW: Rain-proof (IP54)

With motor operating device (32 - 100AF)
□: DC100V
AC100-110V
AC200-220V

Pad locking device
Q2: Plate type

Connection method (internal accessories)
Blank: Lead-wire system
A: Terminal block system

Undervoltage trip device (External)*
• 32/50/63/100AF
□: DC24V
: DC100-110V
: AC100V (50Hz) / AC100-110V (60Hz)
: AC200V (50Hz) / AC200-220V (60Hz)
: AC400V (50Hz) / AC400-440V (60Hz)

Undervoltage trip device (Internal)*

• 125/160/250AF	• 400/630/800AF
□: DC24V	AC/DC24V
: DC48V	AC/DC48V
: DC100-110V	AC/DC100-110V
: DC125V	AC120-130V / DC125V
: AC100-110V	AC200-240V / DC200-220V
: AC110-130V	AC277V
: AC200-240V	AC380-480V
: AC277V	
: AC380-415V	
: AC440-480V	

Shunt trip device (Internal)*
• 32/50/63/100AF
□: AC/DC24V
: AC100-120V / DC100-110V
: AC200-240V
: AC380-450V

Shunt trip device (Internal)*

• 125/160/250AF	• 400/630/800AF
□: AC/DC24V	AC/DC24-48V
: AC/DC48V	AC100-240V / DC100-220V
: AC100-120V / DC100-110V	AC277V
: AC120-130V	AC380-550V
: AC200-240V / DC200-220V	
: AC277V	
: AC380-440V	
: AC440-480V	
: AC500-550V	

Alarm switch*
K: Standard SPDT
J: Standard 2PDT
8: For low level circuit SPDT
9: For low level circuit 2PDT

Auxiliary switch*
W: Standard SPDT
V: Standard 2PDT
1: For low level circuit SPDT
2: For low level circuit 2PDT

* For the available configuration of accessory, see page 06/68.

■ G-TWIN Standard Series

Ampere frame				32A			
Type				**BW32AAG**		**BW32SAG**	
Pole				2	3	2	3
Rated current Reference amb. temp. (40°C)		In(A)		3, 5, 10, 15, 20, 30, 32			
Rated impulse withstand voltage		Uimp(kV)		6		6	
Isolation compliant				●		●	
Rated insulation voltage Ui (V)		AC		500		690	
		DC		–		250*[1]	
Rated breaking capacity Icu/Ics (kA)	IEC 60947-2 EN 60947-2 JIS C 8201-2-1	AC	500V	–		1.5/1	
			440V	1.5/1		2.5/2	
			415V	1.5/1		2.5/2	
			400V	1.5/1		2.5/2	
			380V	1.5/1		2.5/2	
			240V	2.5/2		5/3	
			230V	2.5/2		5/3	
		DC	250V	–		2.5/2*[1]	
	GB14048.2	AC	400V	1.5/1		2.5/2	
			230V	2.5/2		5/3	
Conforming to standards	CE Marking			● (TÜV)		● (TÜV)	
	CCC certificate			●		●	
	Electrical Appliance and Material Safety Law <PS>E*[2]			●		●	
Dimensions (mm)			a	50	75	50	75
			b	100		100	
			c	60		60	
			d	84		84	
Mass (kg)				0.4	0.5	0.4	0.5
Tripping device				Hydraulic-magnetic			
Front mounting, front connection			No-mark	○	○	○	○
Front mounting, rear connection			X	○	○	○	○
Flush mounting, front connection			E	○	○	○	○
Flush mounting, top & bottom connection			Y	○	○	○	○
Plug-in mounting			P	○	○	○	○
IEC 35mm wide rail mounting			No-mark	○	○	○	○
Internal accessories			Page 06/63				
Alarm switch			K	○	○	○	○
Auxiliary switch			W	○	○	○	○
Undervoltage trip			R	○	○	○	○
Shunt trip			F	○	○	○	○
External accessories			Page 06/66				
Handle padlocking device	Cap type		QN	○	○	○	○
Handle padlocking device	Plate type		Q2	▲	▲	▲	▲
Operating handle	N-type		N	○	○	○	○
Operating handle	V-type		V	○	○	○	○
Terminal cover	Short		BT□S	○	○	○	○
Terminal cover	Long		BT□L	○	○	○	○
Insulation barrier	Interphase		BP	○	○	○	○
	Earth		BL	○	○	○	○
Handle locking cover			L1	○	○	○	○
Flat terminal			SS	○	○	○	○
Block terminal			SL	–	–	–	–

●: Approved ○: Available –: Not available ▲: Factory-mounted accessory
Note: *[1] Specify DC only when ordering circut breakers for DC circuit.
*[2] Electrical Appliance and Material Safety Law of Japan

■ G-TWIN Standard Series

Ampere frame				50A								
Type				**BW50AAG**		**BW50EAG**		**BW50SAG**		**BW50RAG**		**BW50HAG**
Pole				2	3	2	3	2	3	2	3	2	3
Rated current Reference amb. temp. (40°C)		In(A)		5, 10, 15, 20, 30, 32, 40, 50						10, 15, 20, 30, 32, 40, 50		15, 20, 30, 40, 50
Rated impulse withstand voltage		Uimp(kV)		6		6		6		6		6
Isolation compliant				●		●		●		●		●
Rated insulation voltage Ui (V)		AC		500		690		690		690		690
		DC		–		250*1		250*1		250*1		250
Rated breaking capacity Icu/Ics (kA)	IEC 60947-2 EN 60947-2 JIS C 8201-2-1	AC	500V	–		1.5/1		5/3		7.5/4		25/7
			440V	1.5/1		2.5/2		7.5/4		10/5		65/17
			415V	1.5/1		2.5/2		7.5/4		10/5		65/17
			400V	1.5/1		2.5/2		7.5/4		10/5		65/17
			380V	1.5/1		2.5/2		7.5/4		10/5		65/17
			240V	2.5/2		5/3		10/5		25/13		125/63
			230V	2.5/2		5/3		10/5		25/13		125/63
		DC	250V	–		2.5/2*1		5/3*1		5/3*1		40/20
	GB14048.2	AC	400V	1.5/1		2.5/2		7.5/4		10/5		–
			230V	2.5/2		5/3		10/5		25/13		–
Conforming to standards	CE Marking			● (TÜV)		● (TÜV)		● (TÜV)		● (TÜV)		●
	CCC certificate			●		●		●		●		–
	Electrical Appliance and Material Safety Law <PS>E*2			●		●		●		●		●
Dimensions (mm) 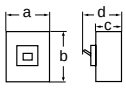			a	50	75	50	75	50	75	50	75	90
			b	100		100		100		100		155
			c	60		60		60		60		68
			d	84		84		84		84		95
Mass (kg)				0.4	0.5	0.4	0.5	0.4	0.5	0.4	0.5	1.0	1.2
Tripping device				Hydraulic-magnetic								Thermal-magnetic	
Front mounting, front connection			No-mark	○	○	○	○	○	○	○	○	○	○
Front mounting, rear connection			X	○	○	○	○	○	○	○	○	○	○
Flush mounting, front connection			E	○	○	○	○	○	○	○	○	○	○
Flush mounting, top & bottom connection			Y	○	○	○	○	○	○	○	○	–	–
Plug-in mounting			P	○	○	○	○	○	○	○	○	○	○
IEC 35mm wide rail mounting			No-mark	○	○	○	○	○	○	○	○	–	–
Internal accessories			Page 06/63										
Alarm switch			K	○	○	○	○	○	○	○	○	○	○
Auxiliary switch			W	○	○	○	○	○	○	○	○	○	○
Undervoltage trip			R	○	○	○	○	○	○	○	○	○	○
Shunt trip			F	○	○	○	○	○	○	○	○	○	○
External accessories			Page 06/66										
Handle padlocking device	Cap type		Q1/QN	○	○	○	○	○	○	○	○	○	○
Handle padlocking device	Plate type		Q2	▲	▲	▲	▲	▲	▲	▲	▲	○	○
Operating handle	N-type		N	○	○	○	○	○	○	○	○	○	○
Operating handle	V-type		V	○	○	○	○	○	○	○	○	○	○
Terminal cover	Short		BT□S	○	○	○	○	○	○	○	○	○	○
Terminal cover	Long		BT□L	○	○	○	○	○	○	○	○	○	○
Insulation barrier	Interphase		BP	○	○	○	○	○	○	○	○	○	○
	Earth		BL	○	○	○	○	○	○	○	○	–	–
Handle locking cover			L1	○	○	○	○	○	○	○	○	○	○
Flat terminal			SS	○	○	○	○	○	○	○	○	○	○
Block terminal			SL	–	–	–	–	–	–	–	–	○	○

●: Approved ○: Available –: Not available ▲ : Factory-mounted accessory
Note: *1 Specify DC only when ordering circut breakers for DC circuit.
*2 Electrical Appliance and Material Safety Law of Japan

06

■ G-TWIN Standard Series

Ampere frame				63A				
Type				**BW63EAG**		**BW63SAG**		**BW63RAG**
Pole				2	3	2	3	2	3
Rated current Reference amb. temp. (40°C)		In(A)		60, 63				
Rated impulse withstand voltage		Uimp(kV)		6		6		6
Isolation compliant				●		●		●
Rated insulation voltage Ui (V)		AC		690		690		690
		DC		250*1		250*1		250*1
Rated breaking capacity Icu/Ics (kA)	IEC 60947-2 EN 60947-2 JIS C 8201-2-1	AC	500V	1.5/1		5/3		7.5/4
			440V	2.5/2		7.5/4		10/5
			415V	2.5/2		7.5/4		10/5
			400V	2.5/2		7.5/4		10/5
			380V	2.5/2		7.5/4		10/5
			240V	5/3		10/5		25/13
			230V	5/3		10/5		25/13
		DC	250V	2.5/2*1		5/3*1		5/3*1
	GB14048.2	AC	400V	2.5/2		7.5/4		10/5
			230V	5/3		10/5		25/13
Conforming to standards	CE Marking			● (TÜV)		● (TÜV)		● (TÜV)
	CCC certificate			●		●		●
	Electrical Appliance and Material Safety Law <PS>E*2			●		●		●
Dimensions (mm) 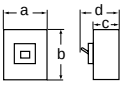			a	50	75	50	75	50	75
			b	100		100		100	
			c	60		60		60	
			d	84		84		84	
Mass (kg)				0.4	0.5	0.4	0.5	0.4	0.5
Tripping device				Hydraulic-magnetic					
Front mounting, front connection			No-mark	○	○	○	○	○	○
Front mounting, rear connection			X	○	○	○	○	○	○
Flush mounting, front connection			E	○	○	○	○	○	○
Flush mounting, top & bottom connection			Y	○	○	○	○	○	○
Plug-in mounting			P	○	○	○	○	○	○
IEC 35mm wide rail mounting			No-mark	○	○	○	○	○	○
Internal accessories			Page 06/63						
Alarm switch			K	○	○	○	○	○	○
Auxiliary switch			W	○	○	○	○	○	○
Undervoltage trip			R	○	○	○	○	○	○
Shunt trip			F	○	○	○	○	○	○
External accessories			Page 06/66						
Handle padlocking device	Cap type		QN	○	○	○	○	○	○
Handle padlocking device	Plate type		Q2	▲	▲	▲	▲	▲	▲
Operating handle	N-type		N	○	○	○	○	○	○
Operating handle	V-type		V	○	○	○	○	○	○
Terminal cover	Short		BT□S	○	○	○	○	○	○
Terminal cover	Long		BT□L	○	○	○	○	○	○
Insulation barrier	Interphase		BP	○	○	○	○	○	○
	Earth		BL	○	○	○	○	○	○
Handle locking cover			L1	○	○	○	○	○	○
Flat terminal			SS	○	○	○	○	○	○
Block terminal			SL	–	–	–	–	–	–

●: Approved ○: Available –: Not available ▲: Factory-mounted accessory
Note: *1 Specify DC only when ordering circut breakers for DC circuit.
*2 Electrical Appliance and Material Safety Law of Japan

■ G-TWIN Standard Series

Ampere frame				100A			
Type				**BW100AAG**		**BW100EAG**	
Pole				2	3	2	3
Rated current Reference amb. temp. (40°C)		In(A)		60, 63, 75, 100		50, 60, 63, 75, 100	
Rated impulse withstand voltage		Uimp(kV)		6		6	
Isolation compliant				●		●	
Rated insulation voltage Ui (V)		AC		500		690	
		DC		–		250*1	
Rated breaking capacity Icu/Ics (kA)	IEC 60947-2 EN 60947-2 JIS C 8201-2-1	AC	500V	–		7.5/4	
			440V	–		10/5	
			415V	–		10/5	
			400V	1.5/1		10/5	
			380V	1.5/1		10/5	
			240V	5/3		25/13	
			230V	5/3		25/13	
		DC	250V	–		5/3*1	
	GB14048.2	AC	400V	1.5/1		10/5	
			230V	5/3		25/13	
Conforming to standards	CE Marking			● (TÜV)		● (TÜV)	
	CCC certificate			●		●	
	Electrical Appliance and Material Safety Law <PS>E*2			●		●	
Dimensions (mm) 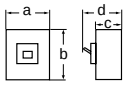			a	50	75	50	75
			b	100		100	
			c	60		60	
			d	84		84	
Mass (kg)				0.4	0.5	0.4	0.5
Tripping device				Thermal -magnetic			
Front mounting, front connection			No-mark	○	○	○	○
Front mounting, rear connection			X	○	○	○	○
Flush mounting, front connection			E	○	○	○	○
Flush mounting, top & bottom connection			Y	○	○	○	○
Plug-in mounting			P	○	○	○	○
IEC 35mm wide rail mounting			No-mark	○	○	○	○
Internal accessories			Page 06/63				
Alarm switch			K	○	○	○	○
Auxiliary switch			W	○	○	○	○
Undervoltage trip			R	○	○	○	○
Shunt trip			F	○	○	○	○
External accessories			Page 06/66				
Handle padlocking device	Cap type		QN	○	○	○	○
Handle padlocking device	Plate type		Q2	▲	▲	▲	▲
Operating handle	N-type		N	○	○	○	○
Operating handle	V-type		V	○	○	○	○
Terminal cover	Short		BT□S	○	○	○	○
Terminal cover	Long		BT□L	○	○	○	○
Insulation barrier	Interphase		BP	○	○	○	○
	Earth		BL	○	○	○	○
Handle locking cover			L1	○	○	○	○
Flat terminal			SS	○	○	○	○
Block terminal			SL	–	–	–	–

●: Approved ○: Available –: Not available ▲ : Factory-mounted accessory
Note: *1 Specify DC only when ordering circut breakers for DC circuit.
*2 Electrical Appliance and Material Safety Law of Japan

■ G-TWIN Standard Series

Ampere frame				125A									
Type				**BW125JAG**			**BW125SAG**			**BW125RAG**			**BW125HAG**
Pole				2	3	4	2	3	4	2	3	4	2	3
Rated current Reference amb. temp. (40°C)		In(A)		15, 20, 30, 40, 50, 60, 75, 100, 125										
Rated impulse withstand voltage		Uimp(kV)		6			6			6			6	
Isolation compliant				●			●			●			●	
Rated insulation voltage Ui (V)		AC		690			690			690			690	
		DC		250			250			250			250	
Rated breaking capacity Icu/Ics (kA)	IEC 60947-2 EN 60947-2 JIS C 8201-2-1	AC	690V	–	–		–			–			–	
			500V	5/3	8/4		10/5			10/5			25/7	
			440V	30/15	30/15		36/18			50/25			65/17	
			415V	30/15	30/15		36/18			50/25			65/17	
			400V	30/15	30/15		36/18			50/25			65/17	
			380V	30/15	30/15		36/18			50/25			65/17	
			240V	50/25	50/25		85/43			100/50			125/63	
			230V	50/25	50/25		85/43			100/50			125/63	
		DC	250V	15/8	15/8		30/15			40/20			40/20	
	GB14048.2	AC	400V	30/15	30/15		36/18			50/25			–	
			230V	50/25	50/25		85/43			100/50			–	
Conforming to standards	CE Marking			● (TÜV)			● (TÜV)			● (TÜV)			●	
	CCC certificate			●			●			●			–	
	Electrical Appliance and Material Safety Law <PS>E*2			● (except for 125A)			● (except for 125A)			● (except for 125A)			● (except for 125A)	
Dimensions (mm)	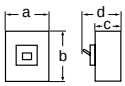		a	60	90	120	90	90	120	90	90	120	90	
			b	155			155			155			155	
			c	68			68			68			68	
			d	95			95			95			95	
Mass (kg)				0.8	1.2	1.6	1.0	1.2	1.6	1.0	1.2	1.6	1.0	1.2
Tripping device				Thermal-magnetic										
Front mounting, front connection			No-mark	○	○	○	○	○	○	○	○	○	○	○
Front mounting, rear connection			X	○	○	○	○	○	○	○	○	○	○	○
Flush mounting, front connection			E	○	○	○	○	○	○	○	○	○	○	○
Plug-in mounting			P	○	○	–	○	○	–	○	○	–	○	○
Internal accessories			Page 06/64											
Alarm switch			K	○	○	○	○	○	○	○	○	○	○	○
Auxiliary switch			W	○	○	○	○	○	○	○	○	○	○	○
Undervoltage trip			R	–	○	○	○	○	○	○	○	○	○	○
Shunt trip			F	○	○	○	○	○	○	○	○	○	○	○
External accessories			Page 06/66											
Handle padlocking device	Cap type		Q1	○	○	○	○	○	○	○	○	○	○	○
Handle padlocking device	Plate type		Q2	–	○	○	○	○	○	○	○	○	○	○
Operating handle	N-type		N	○	○	○	○	○	○	○	○	○	○	○
Operating handle	V-type		V	○	○	○	○	○	○	○	○	○	○	○
Terminal cover	Short		BT□S	○	○	○	○	○	○	○	○	○	○	○
Terminal cover	Long		BT□L	○	○	○	○	○	○	○	○	○	○	○
Insulation barrier	Interphase		BP	○	○	○	○	○	○	○	○	○	○	○
Handle locking cover			L1	○	○	○	○	○	○	○	○	○	○	○
Flat terminal			SS	○	○	○	○	○	○	○	○	○	○	○
Block terminal			SL	○	○	○	○	○	○	○	○	○	○	○

●: Approved ○: Available –: Not available
Note: * Electrical Appliance and Material Safety Law of Japan

■ G-TWIN Standard Series

Ampere frame				160A									
Type				**BW160EAG**		**BW160JAG**			**BW160SAG**			**BW160RAG**		
Pole				2	3	2	3	4	2	3	4	2	3	4
Rated current Reference amb. temp. (40°C)		In(A)		125, 150, 160										
Rated impulse withstand voltage		Uimp(kV)		6		6			6			6		
Isolation compliant				●		●			●			●		
Rated insulation voltage Ui (V)		AC		690		690			690			690		
		DC		250		250			250			250		
Rated breaking capacity Icu/Ics (kA)	IEC 60947-2 EN 60947-2 JIS C 8201-2-1	AC	690V	–		–			–			–		
			500V	5/3		8/4			10/5			10/5		
			440V	18/9		30/15			36/18			50/25		
			415V	18/9		30/15			36/18			50/25		
			400V	18/9		30/15			36/18			50/25		
			380V	18/9		30/15			36/18			50/25		
			240V	36/18		50/25			85/43			100/50		
			230V	36/18		50/25			85/43			100/50		
		DC	250V	10/5		20/10			30/15			30/15		
	GB14048.2	AC	400V	18/9		30/15			36/18			50/25		
			230V	36/18		50/25			85/43			100/50		
Conforming to standards	CE Marking			● (TÜV)		● (TÜV)			● (TÜV)			● (TÜV)		
	CCC certificate			●		●			●			●		
	Electrical Appliance and Material Safety Law <PS>E*			–		–			–			–		
Dimensions (mm)			a	105	105	105	105	140	105	105	140	105	105	140
			b	165		165			165			165		
			c	68		68			68			68		
			d	95		95			95			95		
Mass (kg)				1.4	1.6	1.4	1.6	2.2	1.4	1.6	2.2	1.4	1.6	2.2
Tripping device				Thermal-magnetic										
Front mounting, front connection			No-mark	○	○	○	○	○	○	○	○	○	○	○
Front mounting, rear connection			X	○	○	○	○	○	○	○	○	○	○	○
Flush mounting, front connection			E	○	○	○	○	○	○	○	○	○	○	○
Plug-in mounting			P	○	○	○	○	–	○	○	–	○	○	–
Internal accessories			Page 06/64											
Alarm switch			K	○	○	○	○	○	○	○	○	○	○	○
Auxiliary switch			W	○	○	○	○	○	○	○	○	○	○	○
Undervoltage trip			R	○	○	○	○	○	○	○	○	○	○	○
Shunt trip			F	○	○	○	○	○	○	○	○	○	○	○
External accessories			Page 06/66											
Handle padlocking device	Cap type		Q1	○	○	○	○	○	○	○	○	○	○	○
Handle padlocking device	Plate type		Q2	○	○	○	○	○	○	○	○	○	○	○
Operating handle	N-type		N	○	○	○	○	○	○	○	○	○	○	○
Operating handle	V-type		V	○	○	○	○	○	○	○	○	○	○	○
Terminal cover	Short		BT□S	○	○	○	○	○	○	○	○	○	○	○
Terminal cover	Long		BT□L	○	○	○	○	○	○	○	○	○	○	○
Insulation barrier	Interphase		BP	○	○	○	○	○	○	○	○	○	○	○
Handle locking cover			L1	○	○	○	○	○	○	○	○	○	○	○
Flat terminal			SS	○	○	○	○	○	○	○	○	○	○	○
Block terminal			SL	○	○	○	○	○	○	○	○	○	○	○

●: Approved ○: Available –: Not available
Note: * Electrical Appliance and Material Safety Law of Japan

Molded Case Circuit Breakers
G-TWIN series
Quick reference guide

■ G-TWIN Standard Series

Ampere frame				250A											
Type				**BW250EAG**		**BW250JAG**			**BW250SAG**			**BW250RAG**			**BW250HAG**	
Pole				2	3	2	3	4	2	3	4	2	3	4	2	3
Rated current Reference amb. temp. (40°C)		In(A)		175, 200, 225, 250											125,150,160,175 200,225,250	
Rated impulse withstand voltage		Uimp(kV)		6		6			6			6			6	
Isolation compliant				●		●			●			●			●	
Rated insulation voltage Ui (V)		AC		690		690			690			690			690	
		DC		250		250			250			250			250	
Rated breaking capacity Icu/Ics (kA)	IEC 60947-2 EN 60947-2 JIS C 8201-2-1	AC	690V	–		–			–			–			–	
			500V	5/3		8/4			10/5			10/5			25/7	
			440V	18/9		30/15			36/18			50/25			65/17	
			415V	18/9		30/15			36/18			50/25			65/17	
			400V	18/9		30/15			36/18			50/25			65/17	
			380V	18/9		30/15			36/18			50/25			65/17	
			240V	36/18		50/25			85/43			100/50			125/63	
			230V	36/18		50/25			85/43			100/50			125/63	
		DC	250V	10/5		20/10			30/15			30/15			40/20	
	GB14048.2	AC	400V	18/9		30/15			36/18			50/25			–	
			230V	36/18		50/25			85/43			100/50			–	
Conforming to standards	CE Marking			● (TÜV)		● (TÜV)			● (TÜV)			● (TÜV)			●	
	CCC certificate			●		●			●			●			–	
	Electrical Appliance and Material Safety Law <PS>E*			–		–			–			–			–	
Dimensions (mm) 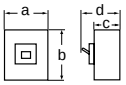			a	105	105	105	105	140	105	105	140	105	105	140	105	
			b	165		165			165			165			165	
			c	68		68			68			68			68	
			d	95		95			95			95			95	
Mass (kg)				1.4	1.6	1.4	1.6	2.2	1.4	1.6	2.2	1.4	1.6	2.2	1.4	1.6
Tripping device				Thermal-magnetic												
Front mounting, front connection			No-mark	○	○	○	○	○	○	○	○	○	○	○	○	○
Front mounting, rear connection			X	○	○	○	○	○	○	○	○	○	○	○	○	○
Flush mounting, front connection			E	○	○	○	○	○	○	○	○	○	○	○	○	○
Plug-in mounting			P	○	○	○	○	–	○	○	–	○	○	–	○	○
Internal accessories			Page 06/64													
Alarm switch			K	○	○	○	○	○	○	○	○	○	○	○	○	○
Auxiliary switch			W	○	○	○	○	○	○	○	○	○	○	○	○	○
Undervoltage trip			R	○	○	○	○	○	○	○	○	○	○	○	○	○
Shunt trip			F	○	○	○	○	○	○	○	○	○	○	○	○	○
External accessories			Page 06/66													
Handle padlocking device	Cap type		Q1	○	○	○	○	○	○	○	○	○	○	○	○	○
Handle padlocking device	Plate type		Q2	○	○	○	○	○	○	○	○	○	○	○	○	○
Operating handle	N-type		N	○	○	○	○	○	○	○	○	○	○	○	○	○
Operating handle	V-type		V	○	○	○	○	○	○	○	○	○	○	○	○	○
Terminal cover	Short		BT□S	○	○	○	○	○	○	○	○	○	○	○	○	○
Terminal cover	Long		BT□L	○	○	○	○	○	○	○	○	○	○	○	○	○
Insulation barrier	Interphase		BP	○	○	○	○	○	○	○	○	○	○	○	○	○
Handle locking cover			L1	○	○	○	○	○	○	○	○	○	○	○	○	○
Flat terminal			SS	○	○	○	○	○	○	○	○	○	○	○	○	○
Block terminal			SL	○	○	○	○	○	○	○	○	○	○	○	○	○

●: Approved ○: Available –: Not available
Note: * Electrical Appliance and Material Safety Law of Japan

■ G-TWIN Standard Series

Ampere frame				400A								
Type				**BW400EAG**		**BW400SAG**		**BW400RAG**			**BW400HAG**		
Pole				2	3	2	3	2	3	4	2	3	4
Rated current Reference amb. temp. (40°C)		In(A)		250, 300, 350, 400									
Rated impulse withstand voltage		Uimp(kV)		8		8		8			8		
Isolation compliant				●		●		●			●		
Rated insulation voltage Ui (V)		AC		690		690		690			690		
		DC		250		250		250			250		
Rated breaking capacity Icu/Ics (kA)	IEC 60947-2 EN 60947-2 JIS C 8201-2-1	AC	690V	–		10/5		15/8			15/8		
			500V	18/9		20/10		36/18			42/21		
			440V	30/15		36/18		50/25			70/35		
			415V	30/15		36/18		50/25			70/35		
			400V	30/15		36/18		50/25			70/35		
			380V	30/15		36/18		50/25			70/35		
			240V	50/25		85/43		100/50			125/63		
			230V	50/25		85/43		100/50			125/63		
		DC	250V	20/10		20/10		40/20			40/20		
	GB14048.2	AC	400V	30/15		36/18		50/25			70/35		
			230V	50/25		85/43		100/50			125/63		
Conforming to standards	CE Marking			● (TÜV)		● (TÜV)		● (TÜV)			● (TÜV)		
	CCC certificate			●		●		●			●		
	Electrical Appliance and Material Safety Law <PS>E*1			–		–		–			–		
Dimensions (mm) 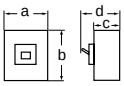			a	140	140	140	140	140	140	185	140	140	185
			b	257		257		257			257		
			c	103		103		103			103		
			d	146		146		146			146		
Mass (kg)				4.6	5.6	4.6	5.6	4.6	5.6	7.4	4.6	5.6	7.4
Tripping device				Thermal-magnetic									
Front mounting, front connection			No-mark	○	○	○	○	○	○	○	○	○	○
Front mounting, rear connection			X	○	○	○	○	○	○	○	○	○	○
Flush mounting, front connection			E	○	○	○	○	○	○	○	○	○	○
Plug-in mounting			P	○	○	○	○	○	○	–	○	○	–
Internal accessories			Page 06/65										
Alarm switch			K	○	○	○	○	○	○	○	○	○	○
Auxiliary switch			W	○	○	○	○	○	○	○	○	○	○
Undervoltage trip			R	○	○	○	○	○	○	○	○	○	○
Shunt trip			F	○	○	○	○	○	○	○	○	○	○
External accessories			Page 06/66										
Handle padlocking device	Cap type		QN	○	○	○	○	○	○	○	○	○	○
Handle padlocking device	Plate type		Q2	○	○	○	○	○	○	○	○	○	○
Operating handle	N-type		N	○	○	○	○	○	○	○	○	○	○
Operating handle	V-type		V	○	○	○	○	○	○	○	○	○	○
Terminal cover	Short		BT□S	○	○	○	○	○	○	○	○	○	○
Terminal cover	Long		BT□L	○	○	○	○	○	○	○	○	○	○
Insulation barrier	Interphase		BP	○	○	○	○	○	○	○	○	○	○
Handle locking cover			L1	○	○	○	○	○	○	○	○	○	○
Flat terminal			SS	○*2	○*2	○*2	○*2	○*2	○*2	○*2	○*2	○*2	○*2
Block terminal			SL	○	○	○	○	○	○	○	○	○	○

●: Approved ○: Available –: Not available
Note: *1 Electrical Appliance and Material Safety Law of Japan
*2 Standard provided

06

Molded Case Circuit Breakers
G-TWIN series
Quick reference guide

■ G-TWIN Standard Series

Ampere frame				630A					800A				
Type				**BW630EAG**	**BW630RAG**		**BW630HAG**		**BW800EAG**	**BW800RAG**		**BW800HAG**	
Pole				3	3	4	3	4	3	3	4	3	4
Rated current Reference amb. temp. (40°C)		In(A)		500, 600, 630					700, 800				
Rated impulse withstand voltage		Uimp(kV)		8	8		8		8	8		8	
Isolation compliant				●	●		●		●	●		●	
Rated insulation voltage Ui (V)		AC		690	690		690		690	690		690	
		DC		250	250		250		250	250		250	
Rated breaking capacity Icu/Ics (kA)	IEC 60947-2 EN 60947-2 JIS C 8201-2-1	AC	690V	–	15/8		15/8		–	15/8		15/8	
			600V	–	–		–		–	–		–	
			500V	18/9	36/18		42/21		18/9	36/18		42/21	
			440V	36/18	50/25		70/35		36/18	50/25		70/35	
			415V	36/18	50/25		70/35		36/18	50/25		70/35	
			400V	36/18	50/25		70/35		36/18	50/25		70/35	
			380V	36/18	50/25		70/35		36/18	50/25		70/35	
			240V	50/25	100/50		125/63		50/25	100/50		125/63	
			230V	50/25	100/50		125/63		50/25	100/50		125/63	
		DC	250V	20/10	40/20		40/20		20/10	40/20		40/20	
	GB14048.2	AC	400V	36/18	50/25		70/35		36/18	50/25		70/35	
			230V	50/25	100/50		125/63		50/25	100/50		125/63	
Conforming to standards	CE Marking			● (TÜV)	● (TÜV)		● (TÜV)		● (TÜV)	● (TÜV)		● (TÜV)	
	CCC certificate			●	●		●		●	●		●	
	Electrical Appliance and Material Safety Law <PS>E*1			–	–		–		–	–		–	
Dimensions (mm)	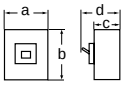		a	210	210	280	210	280	210	210	280	210	280
			b	275	275		275		275	275		275	
			c	103	103		103		103	103		103	
			d	146	146		146		146	146		146	
Mass (kg)				7.8	7.8	10.3	7.8	10.3	8.3	8.3	11	8.3	11
Tripping device				Thermal-magnetic									
Front mounting, front connection			No-mark	○	○	○	○	○	○	○	○	○	○
Front mounting, rear connection			X	○	○	○	○	○	○	○	○	○	○
Flush mounting, front connection			E	○	○	○	○	○	○	○	○	○	○
Plug-in mounting			P	○	○	–	○	–	○	○	–	○	–
Internal accessories			Page 06/65										
Alarm switch			K	○	○		○		○	○		○	
Auxiliary switch			W	○	○		○		○	○		○	
Undervoltage trip			R	○	○		○		○	○		○	
Shunt trip			F	○	○		○		○	○		○	
External accessories			Page 06/66										
Handle padlocking device	Cap type		QN	○	○		○		○	○		○	
Handle padlocking device	Plate type		Q2	○	○		○		○	○		○	
Operating handle	N-type		N	○	○		○		○	○		○	
Operating handle	V-type		V	○	○		○		○	○		○	
Terminal cover	Long		BT□L	○	○		○		○	○		○	
Insulation barrier	Interphase		BP	○	○		○		○	○		○	
Handle locking cover			L1	○	○		○		○	○		○	
Flat terminal			SS	○*2	○*2		○*2		○*2	○*2		○*2	
Block terminal			SL	○	○		○		○	○		○	

●: Approved ○: Available –: Not available
Note: *1 Electrical Appliance and Material Safety Law of Japan
*2 Standard provided

■ G-TWIN Global Series

Ampere frame				50A				100A	
Type				**BW50RAGU**				**BW100EAGU**	
Pole				2		3		2	3
Rated current Reference amb. temp. (40°C)		In(A)		3, 5	10, 15, 20, 30, 32, 40, 50	3, 5	10, 15, 20, 30, 32, 40, 50	60, 63, 70, 75, 80, 90, 100	
Rated impulse withstand voltage		Uimp(kV)		6				6	
Isolation compliant				●				●	
Rated insulation voltage Ui (V)		AC		690				690	
Rated breaking capacity	IEC 60947-2 EN 60947-2 JIS C 8201-2-1 Icu/Ics (kA)	AC	500V	7.5/4				7.5/4	
			440V	10/5				10/5	
			415V	10/5				10/5	
			400V	10/5				10/5	
			380V	10/5				10/5	
			240V	25/13				25/13	
			230V	25/13				25/13	
	GB14048.2 Icu/Ics(kA)	AC	400V	7/4	10/5	7/4	10/5	10/5	
			230V	14/7	25/13	14/7	25/13	25/13	
	UL489 CAN/CSA C22.2 NO.5 (kA)	AC	240V	14		–		14	
Conforming to standards	CE Marking			● (TÜV)				● (TÜV)	
	CCC certificate			●				●	
	UL Listed (NEMA AB1)			●				●	
	Electrical Appliance and Material Safety Law <PS>E*1			●				●	
Dimensions (inch(mm)) 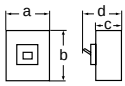			a	1.969 (50)		2.953 (75)		1.969 (50)	2.953 (75)
			b	4.724 (120)				4.724 (120)	
			c	2.362 (60)				2.362 (60)	
			d	3.307 (84)				3.307 (84)	
Mass (kg)				0.5		0.6		0.5	0.6
Tripping device				Hydraulic-magnetic					
Connecting terminal			Page 06/26						
Screw			S□	○		○		○	○
Flat				○		○		○	○
Block				–		–		○	○
Internal accessories			Page 06/63						
Alarm switch			K	○		○		○	○
Auxiliary switch			W	○		○		○	○
Undervoltage trip			R	○		○		○	○
Shunt trip			F	○		○		○	○
External accessories			Page 06/66						
Handle padlocking device Cap type			QN	○		○		○	○
Operating handle N-type			N	○		○		○	○
Operating handle V-type			V	○		○		○	○
Terminal cover Short			BT□S	○*2		○		○	○
Terminal cover Long			BT□L	○		○		○	○
Insulation barrier Interphase			BP	○		○		○	○
Handle locking cover			L1	○		○		○	○

●: Approved ○: Available –: Not available
Note: *1 Electrical Appliance and Material Safety Law of Japan
*2 Standard provided

06

■ G-TWIN Global Series

Ampere frame				125A			
Type				**BW125JAGU**		**BW125RAGU**	
Pole				2	3	2	3
Rated current Reference amb. temp. (40°C)		In(A)		15, 20, 30, 40, 50, 60, 70, 75, 80, 90, 100, 125			
Rated impulse withstand voltage		Uimp(kV)		6		6	
Isolation compliant				●		●	
Rated insulation voltage Ui (V)		AC		690		690	
		DC		250		250	
Rated breaking capacity	IEC 60947-2 EN 60947-2 JIS C 8201-2-1 Icu/Ics (kA)	AC	690V	–		5/3	
			500V	15/8		36/18	
			440V	30/15		50/25	
			415V	30/15		50/25	
			400V	30/15		50/25	
			380V	30/15		50/25	
			240V	50/25		100/50	
			230V	50/25		100/50	
		DC	250V	15/8		40/20	
	GB14048.2 Icu/Ics(kA)	AC	400V	30/15		50/25	
			230V	50/25		100/50	
	UL489 CAN/CSA C22.2 NO.5 (kA)	AC	600V/Y	10	10	18	
			480V/Δ	–	30	50	
			480V/Y	30	30	50	
			240V	50	50	100	
		DC	125/250V	10	10	10	
Conforming to standards	CE Marking			● (TÜV)		● (TÜV)	
	CCC certificate			●		●	
	UL Listed (NEMA AB1)			●		●	
	Electrical Appliance and Material Safety Law <PS>E*			● (except for 125A)		● (except for 125A)	
Dimensions (inch(mm)) 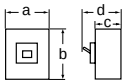			a	2.362 (60)	3.543 (90)	3.543 (90)	
			b	6.732 (171)		6.732 (171)	
			c	2.677 (68)		2.677 (68)	
			d	3.740 (95)		3.740 (95)	
Mass (kg)				0.8	1.2	1.0	1.2
Tripping device				Thermal-magnetic			
Connecting terminal			Page 06/26				
Screw			S□	○	○	○	○
Flat				○	○	○	○
Block				○	○	○	○
Internal accessories			Page 06/64				
Alarm switch			K	○	○	○	○
Auxiliary switch			W	○	○	○	○
Undervoltage trip			R	–	○	○	○
Shunt trip			F	○	○	○	○
External accessories			Page 06/66				
Handle padlocking device Cap type			Q1	○	○	○	○
Handle padlocking device Plate type			Q2	○	○	○	○
Operating handle N-type			N	–	○	○	○
Operating handle V-type			V	–	○	○	○
Operating handle F-type			F	–	○	○	○
Terminal cover Short			BT□S	○	○	○	○
Terminal cover Long			BT□L	○	○	○	○
Insulation barrier Interphase			BP	○	○	○	○
Handle locking cover			L1	○	○	○	○

●: Approved ○: Available –: Not available
Note: * Electrical Appliance and Material Safety Law of Japan

■ G-TWIN Global Series

Ampere frame				250A					
Type				**BW250EAGU**		**BW250JAGU**		**BW250RAGU**	
Pole				2	3	2	3	2	3
Rated current Reference amb. temp. (40°C)		In(A)		125, 150, 160, 175, 200, 225, 250					
Rated impulse withstand voltage		Uimp(kV)		6		6		6	
Isolation compliant				●		●		●	
Rated insulation voltage Ui (V)		AC		690		690		690	
		DC		250		250		250	
Rated breaking capacity	IEC 60947-2 EN 60947-2 JIS C 8201-2-1 Icu/Ics (kA)	AC	690V	–		–		5/3	
			500V	10/5		18/9		36/18	
			440V	18/9		30/15		50/25	
			415V	18/9		30/15		50/25	
			400V	18/9		30/15		50/25	
			380V	18/9		30/15		50/25	
			240V	36/18		50/25		100/50	
			230V	36/18		50/25		100/50	
		DC	250V	10/5		20/10		40/20	
	GB14048.2 Icu/Ics(kA)	AC	400V	18/9		30/15		50/25	
			230V	36/18		50/25		100/50	
	UL489 CAN/CSA C22.2 NO.5 (kA)	AC	600V/Y	–		10		25	
			480V/Δ	–		30		50	
			480V/Y	–		30		50	
			240V	22		50		100	
		DC	125/250V	10		10		10	
Conforming to standards	CE Marking			● (TÜV)		● (TÜV)		● (TÜV)	
	CCC certificate			●		●		●	
	UL Listed (NEMA AB1)			●		●		●	
	Electrical Appliance and Material Safety Law <PS>E*			–		–		–	
Dimensions (inch(mm)) 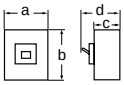			a	4.134 (105)		4.134 (105)		4.134 (105)	
			b	7.126 (181)		7.126 (181)		7.126 (181)	
			c	2.677 (68)		2.677 (68)		2.677 (68)	
			d	3.740 (95)		3.740 (95)		3.740 (95)	
Mass (kg)				1.4	1.6	1.4	1.6	1.4	1.6
Tripping device				Thermal-magnetic					
Connecting terminal			Page 06/26						
Screw			S□	○	○	○	○	○	○
Flat				○	○	○	○	○	○
Block				○	○	○	○	○	○
Internal accessories			Page 06/64						
Alarm switch			K	○	○	○	○	○	○
Auxiliary switch			W	○	○	○	○	○	○
Undervoltage trip			R	○	○	○	○	○	○
Shunt trip			F	○	○	○	○	○	○
External accessories			Page 06/66						
Handle padlocking device	Cap type		Q1	○	○	○	○	○	○
Handle padlocking device	Plate type		Q2	○	○	○	○	○	○
Operating handle	N-type		N	○	○	○	○	○	○
Operating handle	V-type		V	○	○	○	○	○	○
Operating handle	F-type		F	○	○	○	○	○	○
Terminal cover	Short		BT□S	○	○	○	○	○	○
Terminal cover	Long		BT□L	○	○	○	○	○	○
Insulation barrier	Interphase		BP	○	○	○	○	○	○
Handle locking cover			L1	○	○	○	○	○	○

●: Approved ○: Available –: Not available
Note: * Electrical Appliance and Material Safety Law of Japan

Molded Case Circuit Breakers
G-TWIN series
Quick reference guide

■ G-TWIN Global Series

Ampere frame				400A						
Type				**BW400EAGU**		**BW400SAGU**		**BW400RAGU**		**BW400HAGU**
Pole				2	3	2	3	2	3	2	3
Rated current Reference amb. temp. (40°C)		In(A)		250, 300, 350, 400						
Rated impulse withstand voltage		Uimp(kV)		8		8		8		8
Isolation compliant				●		●		●		●
Rated insulation voltage Ui (V)		AC		690		690		690		690
		DC		250		250		250		250
Rated breaking capacity	IEC 60947-2 EN 60947-2 JIS C 8201-2-1 Icu/Ics (kA)	AC	690V	–		10/5		15/8		15/8
			500V	18/9		20/10		36/18		42/21
			440V	30/15		36/18		50/25		70/35
			415V	30/15		36/18		50/25		70/35
			400V	30/15		36/18		50/25		70/35
			380V	30/15		36/18		50/25		70/35
			240V	50/25		85/43		100/50		125/63
			230V	50/25		85/43		100/50		125/63
		DC	250V	20/10		20/10		40/20		40/20
	GB14048.2 Icu/Ics(kA)	AC	400V	30/15		36/18		50/25		70/35
			230V	50/25		85/43		100/50		125/63
	UL489 CAN/CSA C22.2 NO.5 (kA)	AC	600V/Δ	–		–		–		25
			600V/Y	–		–		–		25
			480V/Δ	–		35		50		65 (With block terminal:50)
			480V/Y	–		35		50		65 (With block terminal:50)
			240V	22		50		100		125
		DC	125/250V	10		10		10		10
Conforming to standards	CE Marking			● (TÜV)		● (TÜV)		● (TÜV)		● (TÜV)
	CCC certificate			●		●		●		●
	UL Listed (NEMA AB1)			●		●		●		●
	Electrical Appliance and Material Safety Law <PS>E*			–		–		–		–
Dimensions (inch(mm)) 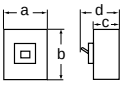			a	5.512 (140)		5.512 (140)		5.512 (140)		5.512 (140)
			b	10.12 (257)		10.12 (257)		10.12 (257)		10.12 (257)
			c	4.055 (103)		4.055 (103)		4.055 (103)		4.055 (103)
			d	5.748 (146)		5.748 (146)		5.748 (146)		5.748 (146)
Mass (kg)				4.6	5.6	4.6	5.6	4.6	5.6	4.6	5.6
Tripping device				Thermal-magnetic						
Connecting terminal			Page 06/26							
Flat				○	○	○	○	○	○	○	○
Block				○	○	○	○	○	○	○	○
Internal accessories			Page 06/65							
Alarm switch			K	○	○	○	○	○	○	○	○
Auxiliary switch			W	○	○	○	○	○	○	○	○
Undervoltage trip			R	○	○	○	○	○	○	○	○
Shunt trip			F	○	○	○	○	○	○	○	○
External accessories			Page 06/66							
Handle padlocking device Cap type			QN	○	○	○	○	○	○	○	○
Handle padlocking device Plate type			Q2	○	○	○	○	○	○	○	○
Operating handle N-type			N	○	○	○	○	○	○	○	○
Operating handle V-type			V	○	○	○	○	○	○	○	○
Operating handle F-type			F	○	○	○	○	○	○	○	○
Terminal cover Short			BT□S	○	○	○	○	○	○	○	○
Terminal cover Long			BT□L	○	○	○	○	○	○	○	○
Insulation barrier Interphase			BP	○	○	○	○	○	○	○	○
Handle locking cover			L1	○	○	○	○	○	○	○	○

●: Approved ○: Available –: Not available
Note: * Electrical Appliance and Material Safety Law of Japan

■ G-TWIN Global Series

Ampere frame				630A		800A	
Type				**BW630RAGU**	**BW630HAGU**	**BW800RAGU**	**BW800HAGU**
Pole				3	3	3	3
Rated current Reference amb. temp. (40°C)		In(A)		500, 600, 630*1		700, 800*2	
Rated impulse withstand voltage		Uimp(kV)		8	8	8	8
Isolation compliant				●	●	●	●
Rated insulation voltage Ui (V)		AC		690	690	690	690
		DC		250	250	250	250
Rated breaking capacity	IEC 60947-2 EN 60947-2 JIS C 8201-2-1 Icu/Ics (kA)	AC	690V	15/8	15/8	15/8	15/8
			500V	36/18	42/21	36/18	42/21
			440V	50/25	70/35	50/25	70/35
			415V	50/25	70/35	50/25	70/35
			400V	50/25	70/35	50/25	70/35
			380V	50/25	70/35	50/25	70/35
			240V	100/50	125/63	100/50	125/63
			230V	100/50	125/63	100/50	125/63
		DC	250V	40/20	40/20	40/20	40/20
	GB14048.2 Icu/Ics(kA)	AC	400V	50/25	70/35	50/25	70/35
			230V	100/50	125/63	100/50	125/63
	UL489 CAN/CSA C22.2 NO.5 (kA)	AC	600V/Δ	–	25	–	25
			600V/Y	–	25	–	25
			480V/Δ	50	65 (With block terminal:50)	50	65 (With block terminal:50)
			480V/Y	–	65 (With block terminal:50)	50	65 (With block terminal:50)
			240V	100	125	100	125
		DC	125/250V	10	10	10	10
Conforming to standards	CE Marking			● (TÜV)	● (TÜV)	● (TÜV)	● (TÜV)
	CCC certificate			●	●	●	●
	UL Listed (NEMA AB1)			●	●	●	●
	Electrical Appliance and Material Safety Law <PS>E*3			–	–	–	–
Dimensions (inch(mm))			a	8.268 (210)	8.268 (210)	8.268 (210)	8.268 (210)
			b	10.83 (275)	10.83 (275)	10.83 (275)	10.83 (275)
			c	4.055 (103)	4.055 (103)	4.055 (103)	4.055 (103)
			d	5.748 (146)	5.748 (146)	5.748 (146)	5.748 (146)
Mass (kg)				8.9	8.9	9.4	9.4
Tripping device				Thermal-magnetic			
Connecting terminal			Page 06/26				
Flat				○	○	○	○
Block				○	○	○	○
Internal accessories			Page 06/65				
Alarm switch			K	○	○	○	○
Auxiliary switch			W	○	○	○	○
Undervoltage trip			R	○	○	○	○
Shunt trip			F	○	○	○	○
External accessories			Page 06/66				
Handle padlocking device	Cap type		QN	○	○	○	○
Handle padlocking device	Plate type		Q2	○	○	○	○
Operating handle	N-type		N	○	○	○	○
Operating handle	V-type		V	○	○	○	○
Terminal cover			BT□L	○	○	○	○
Insulation barrier	Interphase		BP	○	○	○	○
Handle locking cover			L1	○	○	○	○

●: Approved ○: Available –: Not available

Note: *1 Breakers for 630A cannot be manufactured with block terminals.
*2 Block terminals are standard for Breakers for 800A.
*3 Electrical Appliance and Material Safety Law of Japan

Motor protection breakers

Motors are normally controlled by MCCBs and magnetic starters. In this case the MCCB carries out overcurrent or short-circuit current protection while the starter deals with ON-OFF switching of the motor and offers protection against sustained overload currents. These are the motor breakers which combine the two functions.
FUJI motor breakers are designed to eliminate erroneous operations due to the rush current produced at the time of starting the motor. They will trip in the face of sustained overcurrent when the integrated bimetal relay has operated.

■ G-TWIN Standard Series / Motor protection

Ampere frame				32A		
Type				**BW32AAM**	**BW32SAM**	
Pole				3	2	3
Rated current Reference amb. temp. (40°C)		In(A)		1.4, 2.6, 4, 8, 10, 16, 24, 32	(2), (4), 5, 8, 10, 16	0.7, 1.4, 2, 2.6, 4, 5, 8, 10, 12, 16, 24, 32
Rated impulse withstand voltage		Uimp(kV)		6	6	6
Isolation compliant				●	●	●
Rated insulation voltage Ui (V)		AC		500	690	690
Rated breaking capacity Icu/Ics (kA)	IEC 60947-2 EN 60947-2 JIS C 8201-2-1	AC	690V	–	–	–
			500V	–	1.5/1	1.5/1
			440V	1.5/1	2.5/2	2.5/2
			415V	1.5/1	2.5/2	2.5/2
			400V	1.5/1	2.5/2	2.5/2
			380V	1.5/1	2.5/2	2.5/2
			240V	2.5/2	5/3	5/3
			230V	2.5/2	5/3	5/3
	GB14048.2	AC	400V	1.5/1	2.5/2	2.5/2
			230V	2.5/2	5/3	5/3
Conforming to standards	CE Marking			●	●	●
	CCC certificate			●	●	●
	Electrical Appliance and Material Safety Law <PS>E*2			●	●	●
Dimensions (mm) 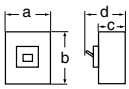			a	75	50	75
			b	100	100	100
			c	60	60	60
			d	84	84	84
Mass (kg)				0.5	0.4	0.5
Tripping device				Hydraulic-magnetic	Hydraulic-magnetic	Hydraulic-magnetic
Front mounting, front connection			No-mark	○	○	○
Front mounting, rear connection			X	○	○	○
Flush mounting, front connection			E	○	○	○
Flush mounting, top & buttom connection			Y	○	○	○
Plug-in mounting			P	○	○	○
IEC 35mm wide rail mounting				○	○	○
Internal accessories			Page 06/63			
Alarm switch			K	○	○	○
Auxiliary switch			W	○	○	○
Undervoltage trip			R	○	○	○
Shunt trip			F	○	○	○
External accessories			Page 06/66			
Handle padlocking device Cap type			QN	○	○	○
Handle padlocking device Plate type			Q2	▲	▲	▲
Operating handle N-type			N	○	○	○
Operating handle V-type			V	○	○	○
Terminal cover Short			BT□S	○	○	○
Terminal cover Long			BT□L	○	○	○
Insulation barrier Interphase			BP	○	○	○
Insulation barrier Earth			BL	○	○	○
Handle locking cover			L1	○	○	○
Flat terminal			SS	○	○	○
Block terminal			SL	–	–	–

●: Approved ○: Available –: Not available ▲ : Factory-mounted accessory
Note: *1 Specify DC only when ordering circuit breakers for DC circuit.
*2 Electrical Appliance and Material Safety Law of Japan

■ G-TWIN Standard Series / Motor protection

Ampere frame				50A		
Type				**BW50EAM**	**BW50SAM**	**BW50RAM**
Pole				3	3	3
Rated current Reference amb. temp. (40°C)		In(A)		24, 32, 40, 45	0.7, 1.4, 2, 2.6, 4, 5, 8, 10, 12, 16, 24, 32, 40, 45	10, 12, 16, 24, 32, 40, 45
Rated impulse withstand voltage		Uimp(kV)		6	6	6
Isolation compliant				●	●	●
Rated insulation voltage Ui (V)		AC		500	690	690
Rated breaking capacity Icu/Ics (kA)	IEC 60947-2 EN 60947-2 JIS C 8201-2-1	AC	690V	–	–	–
			500V	1.5/1	5/3	7.5/4
			440V	2.5/2	7.5/4	10/5
			415V	2.5/2	7.5/4	10/5
			400V	2.5/2	7.5/4	10/5
			380V	2.5/2	7.5/4	10/5
			240V	5/3	10/5	25/13
			230V	5/3	10/5	25/13
	GB14048.2	AC	400V	2.5/2	7.5/4	10/5
			230V	5/3	10/5	25/13
Conforming to standards	CE Marking			●	●	●
	CCC certificate			●	●	●
	Electrical Appliance and Material Safety Law <PS>E*2			●	●	●
Dimensions (mm) 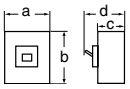			a	75	75	75
			b	100	100	100
			c	60	60	60
			d	84	84	84
Mass (kg)				0.5	0.5	0.5
Tripping device				Hydraulic-magnetic	Hydraulic-magnetic	Hydraulic-magnetic
Front mounting, front connection			No-mark	○	○	○
Front mounting, rear connection			X	○	○	○
Flush mounting, front connection			E	○	○	○
Flush mounting, top & buttom connection			Y	○	○	○
Plug-in mounting			P	○	○	○
IEC 35mm wide rail mounting				○	○	○
Internal accessories			Page 06/63			
Alarm switch			K	○	○	○
Auxiliary switch			W	○	○	○
Undervoltage trip			R	○	○	○
Shunt trip			F	○	○	○
External accessories			Page 06/66			
Handle padlocking device Cap type			QN	○	○	○
Handle padlocking device Plate type			Q2	▲	▲	▲
Operating handle N-type			N	○	○	○
Operating handle V-type			V	○	○	○
Terminal cover Short			BT□S	○	○	○
Terminal cover Long			BT□L	○	○	○
Insulation barrier Interphase			BP	○	○	○
Insulation barrier Earth			BL	○	○	○
Handle locking cover			L1	○	○	○
Flat terminal			SS	○	○	○
Block terminal			SL	–	–	–

●: Approved ○: Available –: Not available ▲ : Factory-mounted accessory
Note: *1 Specify DC only when ordering circuit breakers for DC circuit.
*2 Electrical Appliance and Material Safety Law of Japan

06

■ G-TWIN Standard Series / Motor protection

Ampere frame				63A		100A
Type				**BW63EAM**	**BW63SAM**	**BW100EAM**
Pole				3	3	3
Rated current Reference amb. temp. (40°C)		In(A)		63	63	63, 75, 90
Rated impulse withstand voltage		Uimp(kV)		6	6	6
Isolation compliant				●	●	●
Rated insulation voltage Ui (V)		AC		690	690	690
Rated breaking capacity Icu/Ics (kA)	IEC 60947-2 EN 60947-2 JIS C 8201-2-1	AC	690V	–	–	–
			500V	1.5/1	5/3	7.5/4
			440V	2.5/2	7.5/4	10/5
			415V	2.5/2	7.5/4	10/5
			400V	2.5/2	7.5/4	10/5
			380V	2.5/2	7.5/4	10/5
			240V	5/3	10/5	25/13
			230V	5/3	10/5	25/13
	GB14048.2	AC	400V	2.5/2	7.5/4	10/5
			230V	5/3	10/5	25/13
Conforming to standards	CE Marking			●	●	●
	CCC certificate			●	●	●
	Electrical Appliance and Material Safety Law <PS>E*2			●	●	●
Dimensions (mm) 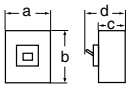			a	75	75	75
			b	100	100	100
			c	60	60	60
			d	84	84	84
Mass (kg)				0.6	0.6	0.6
Tripping device				Hydraulic-magnetic	Hydraulic-magnetic	Hydraulic-magnetic
Front mounting, front connection			No-mark	○	○	○
Front mounting, rear connection			X	○	○	○
Flush mounting, front connection			E	○	○	○
Flush mounting, top & buttom connection			Y	○	○	○
Plug-in mounting			P	○	○	○
IEC 35mm wide rail mounting				○	○	○
Internal accessories			Page 06/63			
Alarm switch			K	○	○	○
Auxiliary switch			W	○	○	○
Undervoltage trip			R	○	○	○
Shunt trip			F	○	○	○
External accessories			Page 06/66			
Handle padlocking device	Cap type		QN	○	○	○
Handle padlocking device	Plate type		Q2	▲	▲	▲
Operating handle	N-type		N	○	○	○
Operating handle	V-type		V	○	○	○
Terminal cover	Short		BT□S	○	○	○
Terminal cover	Long		BT□L	○	○	○
Insulation barrier	Interphase		BP	○	○	○
Insulation barrier	Earth		BL			
Handle locking cover			L1	○	○	○
Flat terminal			SS	○	○	○
Block terminal			SL	○	○	○

●: Approved ○: Available –: Not available ▲ : Factory-mounted accessory
Note: *1 Specify DC only when ordering circuit breakers for DC circuit.
*2 Electrical Appliance and Material Safety Law of Japan

■ G-TWIN Standard Series / Motor protection

Ampere frame				125A		250A		
Type				**BW125JAM**	**BW125RAM**	**BW250EAM**	**BW250JAM**	**BW250RAM**
Pole				3	3	3	3	3
Rated current Reference amb. temp. (40°C)		In(A)		16, 24, 32, 40, 45, 60, 75, 90		125, 150, 175, 225		
Rated impulse withstand voltage		Uimp(kV)		6	6	6	6	6
Isolation compliant				●	●	●	●	●
Rated insulation voltage Ui (V)		AC		690	690	690	690	690
Rated breaking capacity Icu/Ics (kA)	IEC 60947-2 EN 60947-2 JIS C 8201-2-1	AC	690V	–	–	–	–	–
			500V	8/4	10/5	5/3	8/4	10/5
			440V	30/15	50/25	18/9	30/15	50/25
			415V	30/15	50/25	18/9	30/15	50/25
			400V	30/15	50/25	18/9	30/15	50/25
			380V	30/15	50/25	18/9	30/15	50/25
			240V	50/25	100/50	36/18	50/25	100/50
			230V	50/25	100/50	36/18	50/25	100/50
	GB14048.2	AC	400V	30/15	50/25	18/9	30/15	50/25
			230V	50/25	100/50	36/18	50/25	100/50
Conforming to standards	CE Marking			●	●	●	●	●
	CCC certificate			●	●	●	●	●
	Electrical Appliance and Material Safety Law <PS>E*2			●	●	–	–	–
Dimensions (mm)	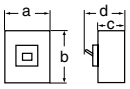		a	90	90	105	105	105
			b	155	155	165	165	165
			c	68	68	68	68	68
			d	95	95	95	95	95
Mass (kg)				1.2	1.2	1.6	1.6	1.6
Tripping device				Thermal-magnetic	Thermal-magnetic	Thermal-magnetic	Thermal-magnetic	Thermal-magnetic
Front mounting, front connection			No-mark	○	○	○	○	○
Front mounting, rear connection			X	○	○	○	○	○
Flush mounting, front connection			E	○	○	○	○	○
Flush mounting, top & buttom connection			Y	○	○	○	○	○
Plug-in mounting			P	○	○	○	○	○
IEC 35mm wide rail mounting				○	○	○	○	○
Internal accessories			Page 06/64					
Alarm switch			K	○	○	○	○	○
Auxiliary switch			W	○	○	○	○	○
Undervoltage trip			R	○	○	○	○	○
Shunt trip			F	○	○	○	○	○
External accessories			Page 06/66					
Handle padlocking device Cap type			Q1	○	○	○	○	○
Handle padlocking device Plate type			Q2	○	○	○	○	○
Operating handle N-type			N	○	○	○	○	○
Operating handle V-type			V	○	○	○	○	○
Terminal cover Short			BT□S	○	○	○	○	○
Terminal cover Long			BT□L	○	○	○	○	○
Insulation barrier Interphase			BP	○	○	○	○	○
Handle locking cover			L1	○	○	○	○	○
Flat terminal			SS	○	○	○	○	○
Block terminal			SL	○	○	○	○	○

●: Approved ○: Available –: Not available ▲ : Factory-mounted accessory
Note: *1 Specify DC only when ordering circuit breakers for DC circuit.
*2 Electrical Appliance and Material Safety Law of Japan

06

■ Mounting modifications

• Standard series

Standard type FUJI breakers are front mounting with front connections. The standard breaker can easily be modified to become front mounting rear connection type, flush mounting type and plug-in type. The additional parts such as insulation bases, barriers, covers and similar parts are added as required.

Front mounting
Front connection

BASIC DESIGN

Additional main parts	Front mounting Rear connection (X type)
Bar stud terminal 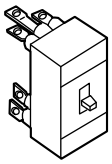	BW32 BW50 BW63 BW100
Bar stud terminal 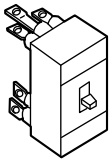	BW50HAG BW125 BW160 BW250 BW400 BW630 BW800 Each stud can be turned by 90°

Additional main parts	Flush mounting Rear connection (E type)
Bar stud terminal 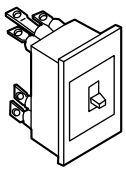	BW32 BW50 BW63 BW100
Bar stud terminal 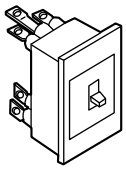	BW50HAG BW125 BW160 BW250 BW400 BW630 BW800 Each stud can be turned by 90°

Additional main parts	Flush mounting Top and bottom connection (Y type)
Decorative flush plate 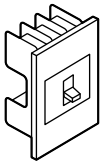	BW32 BW50 BW63 BW100

Additional main parts	Plug-in mounting (P type)
Bar stud terminal 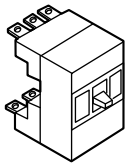	BW32 BW50 BW63 BW100
Round stud terminal 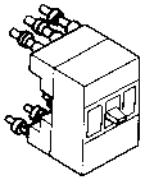	BW50HAG BW125
Bar stud terminal 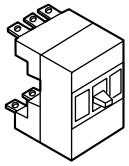	BW160 BW250 BW400 BW630 BW800 Each stud can be turned by 90°

• **Global series**

Front mounting
Front connection

BASIC DESIGN

Screw

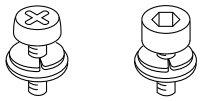

Flat terminal

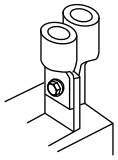

Block terminal

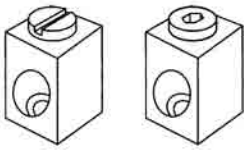

Terminal connection

■ Terminal connection/Front mounting, front connection

• 32AF to 100AF

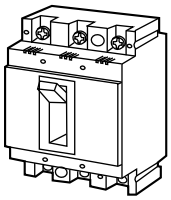

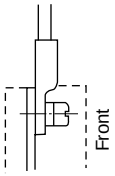

Flat terminal

Self lifting screw	Breaker type	Tightening torque (N•m)	Size
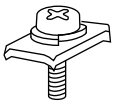	BW32 BW50 BW100*	2.3 to 2.8	M5×14
Pan-head screw 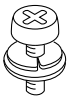	BW63 BW100	5.5 to 7.5	M8×15

* Breaker of rated current : 50A

• 125AF to 250AF

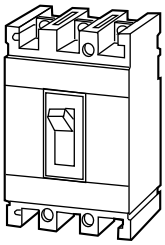

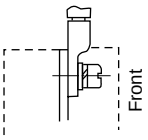

Pan-head screw 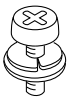	Breaker type	Tightening torque (N•m)	Size (mm)
	BW50HAG BW125	5.5 to 7.5	M8×16
Hexagonal socket head bolt	BW160 BW250	8.0 to 13.0	M8×16

• 400AF to 800AF

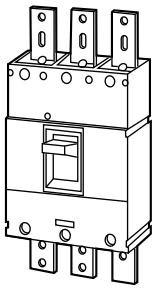

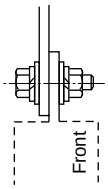

Flat terminal

Hexagonal head bolt	Breaker type	Tightening torque (N•m)	Size (mm)
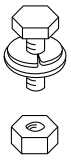	BW400	40 to 50	M12×35
	BW630 BW800	40 to 50	M12×40

Type of connection/up to 250AF
Front mounting front connection

Direct connection

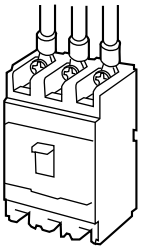

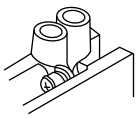

Flat terminal connection
Flat terminals are required.

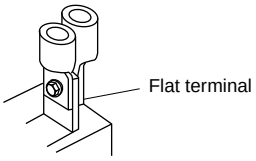

Flat bar studs/1-hole type

Breaker type	Pole	Type of flat terminal
BW32 BW50	2 3	**BZ6S10C502** **BZ6S10C503**
BW63 BW100*	2 3	**BZ6S10C1002** **BZ6S10C1003**
BW50HAG BW125	2 3 4	**BW9SS0CA-2** **BW9SS0CA-3** **BW9SS0CA-4**
BW160 BW250	2 3 4	**BZ-S50B-2252** **BZ-S50B-2253** **BW9SS0GA-4**

* BW100 breaker of rated current 50A: BZ6S10C502 or 503.

■ Wire size and crimp terminal

The following is the size recommendations for crimp terminals.

Crimp terminal R : JIS C2805
CB : JEM-1399
JST : Product of Japan Crimp Terminal Co., Ltd.

Ampere frame	Breaker	Wire size(mm^2)										
		1.04 | 2.63	2.63 | 6.64	6.64 | 10.52	10.52 | 16.78	16.78 | 26.66	26.66 | 42.42	42.42 | 60.57	96.3 | 117.2	117.2 | 152.05	192.6 | 242.27	242.27 | 325
32	BW32	R2-5	R5.5-5	R8-5	R14-5							
50	BW50AAG,EAG,SAG	R2-5	R5.5-5	R8-5	R14-5							
	BW50HAG	R2-8	R5.5-8	R8-8	R14-8	R22-8	JST38-S8	CB60-8				
63	BW63	R2-8	R5.5-8	R8-8	R14-8	JST22-S8						
100	BW100	R2-8	R5.5-8	R8-8	R14-8	JST22-S8	JST38-S8					
125	BW125	R2-8	R5.5-8	R8-8	R14-8	R22-8	JST38-S8	CB60-8				
160 250	BW160 BW250					R22-8	R38-8	R60-8	CB100-8			
400	BW400						R38-12	R60-12	R100-12	R150-12	R200-12	JST325-12
630	BW630								R100-12	R150-12	R200-12	JST325-12
800	BW800								R100-12	R150-12	R200-12	JST325-12

■ Breaker termination

• Standard

MCCB type	Front connection	Rear connection **X**	Flush mounting **E**	**Y**	Plug-in mounting **P**
BW32 BW50	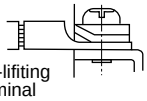 Self-lifiting terminal	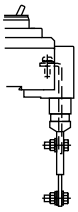	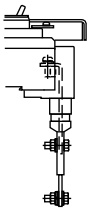	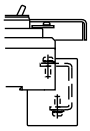	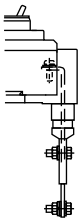
BW63 BW100	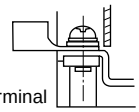 Flat terminal				
BW50HAG BW125		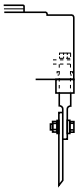 90° rotational stud	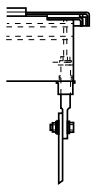 90° rotational stud	—	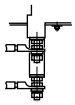
BW160 BW250	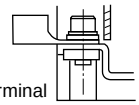 Flat terminal				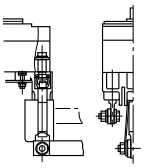 90° rotational stud
BW400 BW630 BW800	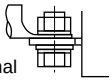 Flat terminal				

06

■ Notes on wiring (global series)

Notes on connecting wires (conductors)

- Connect wires to the UL breaker according to NEC (National Electric Code) or CEC (Canadian Electrical Code) Part 1.
- Use 75°C copper wires for wiring. UL-certified or CSA-certified wires are recommended.
- If a large current (for example, a short-circuit current) flows, it causes a huge electromagnetic force between wires. Therefore, be sure to secure the wires sufficiently.
- Re-tighten terminal screws periodically.

	Terminal position		Applicable breaker type		
Code	Line	Load	BW50	BW100, 125, 250	BW400, 630, 800
Blank	Screw	Screw	●	●	–
Blank	Flat teminal	Flat teminal	–	–	●
SB	Block terminal	Block terminal	–	●	●
SF	Flat teminal	Flat teminal	●	●	–
S3	Screw	Flat terminal	●	●	–
S4	Flat teminal	Screw	●	●	–
S5	Screw	Block terminal	–	●	–
S6	Block terminal	Screw	–	●	–
S7	Flat teminal	Block terminal	–	●	●
S8	Block terminal	Flat terminal	–	●	●

Block terminal connection

- Choose from the stranded wires shown in Table.

Wire size: AWG or MCM [mm^2]	No. of wires stranded
14 to 2 [2.1 to 33.6]	7
1 to 4/0 [42.4 to 107.2]	19
250 to 500 [127 to 250]	37

Values in [ ] are those converted from AWG or MCM sizes to mm^2.

* See the instruction manual that comes with the breaker for more details.

Precautions

- Two wires of different sizes cannot be connected to the same block terminal.
- Be sure to use stranded wires according to Table "Number of wires stranded."
- Multi-conductor wires cannot be connected.
- Do not solder wires together.

Wire size and crimp terminal

• Crimp terminal connection

MCCB	Rated current (A)	Applicable crimp terminal 75˚C wire			Connectable wire size (AWG)	Tightening torque (N•m)	Type of screw head and size (mm)
		J.S.T Mfg. Co., Ltd.	Nichifu Co., Ltd.	Daido Solderless Terminal Mfg. Co., Ltd.	75˚C wire		
BW50RAGU	3	R2-5	R2-5M R2-5	2-S5, 2-5	14AWG	2.3-2.8	Cross/straight slotted pan-head screw M5 x 14
	5						
	10						
	15						
	20	R5.5-5	R3.5-5S, R3.5-5L, 5.5-6N, R5.5-5S, R5.5-5	3.5-5, 5.5-S5, 5.5-5, 5.5-L5	12AWG		
	30				10AWG		
	40	R8-5	R8-5S, R8-5	8-S5, 8-5	8AWG		
	50						
BW100EAGU	60	R14-8	R14-8S, R14-8	R14-S8, R14-8	6AWG	5.5-7.5	Cross/straight slotted pan-head screw M8 x 15
	75	22-S8	R22-8S, R22-8	R22-S8, 22-8	4AWG		
	100	38-S8	R38-8S	38-S8	3AWG		
BW125JAGU BW125RAGU	15	R2-8	R2-8	2-8, 2-B8	14AWG	5.8 (5.3-6.4)	Cross/straight slotted pan-head screw M8 x 16
	20	5.5-S8, R5.5-8	R3.5-8, R5.5-8	3.5-8, 5.5-8	12AWG		
	30		R5.5-8	5.5-8	10AWG		
	40	8-8NS, R8-8	R8-8	8-8	8AWG		
	50						
	60	14-8NS, 14-S8, R14-8	R14-8S, R14-8	14-S8, 14-8	6AWG		
	70	22-S8, R22-8, CB22-S8	R22-8S, R22-8, CB22-8S	22-S8, 22-8, CB22-8	4AWG		
	75						
	80						
	90	38-S8	R38-8S	38-S8	3AWG		
	100						
	125				1AWG		
BW250EAGU BW250JAGU BW250RAGU	125	38-S8, R38-8	R38-8S, R38-8	38-S8, 38-8	1AWG	10.5 (8-13)	Hexagon socket head bolt M8 x 16
	150	60-S8, R60-8	R60-8, CB60-8, CB60-8S	60-8, CB60-8	1/0AWG		
	175	70-8	R70-8	70-8	2/0AWG		
	200	CB80-S8		CB80-8	3/0AWG		
	225	CB100-S8		CB100-8	4/0AWG		
	250	CB150-S8	CB150-8	CB150-8	250MCM		

Notes: • AWG/MCM is the UL approved wire unit.
• The allowable temperature of wire is 75˚C. (UL CSA approved)
• Be sure to use UL-certified or CSA-certified crimp tools commercially available.

• Flat terminal connection

MCCB	Rated current (A)	Applicable crimp terminal 75˚C wire			Connectable wire size (AWG)	Tightening torque (N•m)		Type of screw head and size (mm)
		J.S.T Mfg. Co., Ltd.	Nichifu Co., Ltd.	Daido Solderless Terminal Mfg. Co., Ltd.	75˚C wire	Wire side	MCCB side	
BW50RAGU	3	R2-5	R2-5M	2-S5, 2-5	14AWG	3.5 to 4.5	2.3 to 2.8	Hexagon socket head bolt M5 x 16
	5		R2-5					
	10							
	15							
	20	R5.5-5	R3.5-5S, R3.5-5L, 5.5-6N.	3.5-5, 5.5-S5	12AWG			
	30		R5.5-5S, R5.5-5	5.5-5, 5.5-L5	10AWG			
	40	R8-5	R8-5S, R8-5	8-S5, 8-5	8AWG			
	50							
BW100EAGU	60	R14-8	R14-8S, R14-8	R14-S8, R14-8	6AWG	8 to 10	5.5 to 7.5	Hexagon socket head bolt M8 x 22
	75	22-S8	R22-8S, R22-8	R22-S8, 22-8	4AWG			
	100	38-S8	R38-8S	38-S8	3AWG			
BW125JAGU BW125RAGU	15	R2-8	R2-8	2-8, 2-B8	14AWG	9 (8 to 10)	5.8 (5.3 to 6.4)	Cross/straight slotted pan-head screw M8 x 16
	20	5.5-S8, R5.5-8	R3.5-8, R5.5-8	3.5-8, 5.5-8	12AWG			
	30		R5.5-8	5.5-8	10AWG			
	40	8-8NS, R8-8	R8-8	8-8	8AWG			
	50							
	60	14-8NS, 14-S8, R14-8	R14-8S, R14-8	14-S8, 14-8	6AWG			
	70	22-S8, R22-8, CB22-S8	R22-8S, R22-8, CB22-8S	22-S8, 22-8, CB22-8	4AWG			
	75							
	80							
	90	38-S8	R38-8S	38-S8	3AWG			
	100							
	125				1AWG			
BW250EAGU BW250JAGU BW250RAGU	125	38-S8, R38-8	R38-8S, R38-8	38-S8, 38-8	1AWG	9 (8 to 10)	10.5 (8 to 13)	Hexagon socket head bolt M8 x 16
	150	60-S8, R60-8	R60-8, CB60-8, CB60-8S	60-8, CB60-8	1/0AWG			
	175	70-8	R70-8	70-8	2/0AWG			
	200	CB80-S8		CB80-8	3/0AWG			
	225	CB100-S8		CB100-8	4/0AWG			
	250	CB150-S8	CB150-8	CB150-8	250MCM			
BW400EAGU BW400SAGU BW400RAGU BW400HAGU	250	150-12	R150-12		250MCM	45 (40 to 50)	43.5 (39.2 to 48)	Hexagon head bolt M12 x 35
	300	180-12	R180-12		350MCM			
	350	325-12	R325-12N		500MCM			
	400	325-12	R325-12N		500MCM			
		R80-12	R80-12		3/0AWG(x2)			
BW630RAGU BW630HAGU	500	R150-12		R150-12	250MCM(x2)	47.04 (42.4 to 51.7)	47.04 (42.4 to 51.7)	Hexagon head bolt M12 x 40
	600	180-12		R180-12	350MCM(x2)			
	630	325-12	R325-12N	R325-12 □	500MCM(x2)			
BW800RAGU BW800HAGU	700	325-12		R325-12 □	500MCM(x2)	47.04 (42.4 to 51.7)	47.04 (42.4 to 51.7)	Hexagon head bolt M12 x 40

Notes: • AWG/MCM is the UL approved wire unit.
• The allowable temperature of wire is 75˚C. (UL CSA approved)

Wire size and terminal

• Block terminal connection

MCCB	Rated current (A)	Connectable wire size (AWG)	Tightening torque (N•m)	Type of screw head and size (mm)	Figure
BW100EAGU	60	6AWG	5.8 (5.5 to 6.5)	Slotted set screw	
	70	4AWG			
	75				
	80				
	90	3AWG			
	100				
BW125JAGU BW125RAGU	15	14AWG	5.8 (5.8 to 6.4)	Slotted set screw	
	20	12AWG			
	30	10AWG			
	40	8AWG			
	50				
	60	6AWG			
	70	4AWG			
	75				
	80				
	90	3AWG			
	100				
	125	1AWG			
BW250EAGU BW250JAGU BW250RAGU	125	1AWG	23 (23 to 25.3)	Hexagon socket head setscrew: 8 mm (5/16 inch)	Screw head size 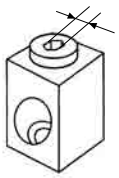
	150	1/0AWG			
	175	2/0AWG			
	200	3/0AWG			
	225	4/0AWG			
	250	250MCM			
BW400EAGU BW400SAGU BW400RAGU BW400HAGU	250	250MCM	43.5 (43.5 to 48)	Hexagon socket head setscrew: 9.53 mm (3/8 inch)	
	300	350MCM			
	350	500MCM			
	400	3/0AWG(x2)	31.9 (31.9 to 35.1)	Hexagon socket head setscrew: 8 mm (5/16 inch)	
BW630RAGU BW630HAGU	500	250MCM(x2)	31.1 (31.1 to 34.2)	Hexagon socket head setscrew: 8 mm (5/16 inch)	
	600	350MCM(x2)			
BW800RAGU BW800HAGU	700	500MCM(x2)	31.1 (31.1 to 34.2)	Hexagon socket head setscrew: 8 mm (5/16 inch)	
	800	300MCM(x3)			

Notes: • AWG/MCM is the UL approved wire unit.
• The allowable temperature of wire is 75˚C. (UL CSA approved)

■ Type number, Standard series (Line protection)

● AAG series, 2-pole IEC/EN/GB/JIS conformed

Breaker ampere frame	Rated current (A)	Type	□: Available mounting and connection
32	3	BW32AAG-2P003□	Blank, X, E, Y, P
	5	BW32AAG-2P005□	
	10	BW32AAG-2P010□	
	15	BW32AAG-2P015□	
	20	BW32AAG-2P020□	
	30	BW32AAG-2P030□	
	32	BW32AAG-2P032□	
50	5	BW50AAG-2P005□	Blank, X, E, Y, P
	10	BW50AAG-2P010□	
	15	BW50AAG-2P015□	
	20	BW50AAG-2P020□	
	30	BW50AAG-2P030□	
	32	BW50AAG-2P032□	
	40	BW50AAG-2P040□	
	50	BW50AAG-2P050□	

Mounting	Connection	□
Front	Front	Blank
Front	Rear	X
Flush	Rear	E
Flush	Top and buttom	Y
Plug-in		P

● EAG series, 2-pole IEC/EN/GB/JIS conformed

Breaker ampere frame	Rated current (A)	Type	□: Available mounting and connection
50	5	BW50EAG-2P005□	Blank, X, E, Y, P
	10	BW50EAG-2P010□	
	15	BW50EAG-2P015□	
	20	BW50EAG-2P020□	
	30	BW50EAG-2P030□	
	32	BW50EAG-2P032□	
	40	BW50EAG-2P040□	
	50	BW50EAG-2P050□	
63	60	BW63EAG-2P060□	Blank, X, E, Y, P
	63	BW63EAG-2P063□	
100	50	BW100EAG-2P050□	Blank, X, E, Y, P
	60	BW100EAG-2P060□	
	63	BW100EAG-2P063□	
	75	BW100EAG-2P075□	
	100	BW100EAG-2P100□	
160	125	BW160EAG-2P125□	Blank, X, E, P
	150	BW160EAG-2P150□	
	160	BW160EAG-2P160□	
250	175	BW250EAG-2P175□	Blank, X, E, P
	200	BW250EAG-2P200□	
	225	BW250EAG-2P225□	
	250	BW250EAG-2P250□	
400	250	BW400EAG-2P250□	Blank, X, E, P
	300	BW400EAG-2P300□	
	350	BW400EAG-2P350□	
	400	BW400EAG-2P400□	

● JAG series, 2-pole IEC/EN/GB/JIS conformed

Breaker ampere frame	Rated current (A)	Type	□: Available mounting and connection
125	15	BW125JAG-2P015□	Blank, X, E, P
	20	BW125JAG-2P020□	
	30	BW125JAG-2P030□	
	40	BW125JAG-2P040□	
	50	BW125JAG-2P050□	
	60	BW125JAG-2P060□	
	75	BW125JAG-2P075□	
	100	BW125JAG-2P100□	
	125	BW125JAG-2P125□	
160	125	BW160JAG-2P125□	Blank, X, E, P
	150	BW160JAG-2P150□	
	160	BW160JAG-2P160□	
250	175	BW250JAG-2P175□	Blank, X, E, P
	200	BW250JAG-2P200□	
	225	BW250JAG-2P225□	
	250	BW250JAG-2P250□	

● SAG series, 2-pole IEC/EN/GB/JIS conformed

Breaker ampere frame	Rated current (A)	Type	□: Available mounting and connection*
32	3	BW32SAG-2P003□	Blank, X, E, Y, P
	5	BW32SAG-2P005□	
	10	BW32SAG-2P010□	
	15	BW32SAG-2P015□	
	20	BW32SAG-2P020□	
	30	BW32SAG-2P030□	
	32	BW32SAG-2P032□	
50	5	BW50SAG-2P005□	Blank, X, E, Y, P
	10	BW50SAG-2P010□	
	15	BW50SAG-2P015□	
	20	BW50SAG-2P020□	
	30	BW50SAG-2P030□	
	32	BW50SAG-2P032□	
	40	BW50SAG-2P040□	
	50	BW50SAG-2P050□	
63	60	BW63SAG-2P060□	Blank, X, E, Y, P
	63	BW63SAG-2P063□	
125	15	BW125SAG-2P015□	Blank, X, E, P
	20	BW125SAG-2P020□	
	30	BW125SAG-2P030□	
	40	BW125SAG-2P040□	
	50	BW125SAG-2P050□	
	60	BW125SAG-2P060□	
	75	BW125SAG-2P075□	
	100	BW125SAG-2P100□	
	125	BW125SAG-2P125□	
160	125	BW160SAG-2P125□	Blank, X, E, P
	150	BW160SAG-2P150□	
	160	BW160SAG-2P160□	
250	175	BW250SAG-2P175□	Blank, X, E, P
	200	BW250SAG-2P200□	
	225	BW250SAG-2P225□	
	250	BW250SAG-2P250□	
400	250	BW400SAG-2P250□	Blank, X, E, P
	300	BW400SAG-2P300□	
	350	BW400SAG-2P350□	
	400	BW400SAG-2P400□	

● HAG series, 2-pole IEC/EN/GB/JIS conformed

Breaker ampere frame	Rated current (A)	Type	□: Available mounting and connection*
400	250	BW400HAG-2P250□	Blank, X, E, P
	300	BW400HAG-2P300□	
	350	BW400HAG-2P350□	
	400	BW400HAG-2P400□	

* See page 06/29.

● RAG series, 2-pole IEC/EN/GB/JIS conformed

Breaker ampere frame	Rated current (A)	Type	□: Available mounting and connection*
50	10	BW50RAG-2P010□	Blank, X, E, Y, P
	15	BW50RAG-2P015□	
	20	BW50RAG-2P020□	
	30	BW50RAG-2P030□	
	32	BW50RAG-2P032□	
	40	BW50RAG-2P040□	
	50	BW50RAG-2P050□	
63	60	BW63RAG-2P060□	Blank, X, E, Y, P
	63	BW63RAG-2P063□	
125	15	BW125RAG-2P015□	Blank, X, E, P
	20	BW125RAG-2P020□	
	30	BW125RAG-2P030□	
	40	BW125RAG-2P040□	
	50	BW125RAG-2P050□	
	60	BW125RAG-2P060□	
	75	BW125RAG-2P075□	
	100	BW125RAG-2P100□	
	125	BW125RAG-2P125□	
160	125	BW160RAG-2P125□	Blank, X, E, P
	150	BW160RAG-2P150□	
	160	BW160RAG-2P160□	
250	175	BW250RAG-2P175□	Blank, X, E, P
	200	BW250RAG-2P200□	
	225	BW250RAG-2P225□	
	250	BW250RAG-2P250□	
400	250	BW400RAG-2P250□	Blank, X, E, P
	300	BW400RAG-2P300□	
	350	BW400RAG-2P350□	
	400	BW400RAG-2P400□	

● HAG series, 2-pole IEC/EN/JIS conformed

Breaker ampere frame	Rated current (A)	Type	□: Available mounting and connection*
50	15	BW50HAG-2P015□	Blank, X, E, P
	20	BW50HAG-2P020□	
	30	BW50HAG-2P030□	
	40	BW50HAG-2P040□	
	50	BW50HAG-2P050□	
125	15	BW125HAG-2P015□	Blank, X, E, P
	20	BW125HAG-2P020□	
	30	BW125HAG-2P030□	
	40	BW125HAG-2P040□	
	50	BW125HAG-2P050□	
	60	BW125HAG-2P060□	
	75	BW125HAG-2P075□	
	100	BW125HAG-2P100□	
	125	BW125HAG-2P125□	
250	125	BW250HAG-2P125□	Blank, X, E, P
	150	BW250HAG-2P150□	
	160	BW250HAG-2P160□	
	175	BW250HAG-2P175□	
	200	BW250HAG-2P200□	
	225	BW250HAG-2P225□	
	250	BW250HAG-2P250□	

● AAG series, 3-pole IEC/EN/GB/JIS conformed

Breaker ampere frame	Rated current (A)	Type	□: Available mounting and connection*
32	3	BW32AAG-3P003□	Blank, X, E, Y, P
	5	BW32AAG-3P005□	
	10	BW32AAG-3P010□	
	15	BW32AAG-3P015□	
	20	BW32AAG-3P020□	
	30	BW32AAG-3P030□	
	32	BW32AAG-3P032□	
50	5	BW50AAG-3P005□	Blank, X, E, Y, P
	10	BW50AAG-3P010□	
	15	BW50AAG-3P015□	
	20	BW50AAG-3P020□	
	30	BW50AAG-3P030□	
	32	BW50AAG-3P032□	
	40	BW50AAG-3P040□	
	50	BW50AAG-3P050□	
100	60	BW100AAG-3P060□	Blank, X, E, Y, P
	63	BW100AAG-3P063□	
	75	BW100AAG-3P075□	
	100	BW100AAG-3P100□	

● EAG series, 3-pole IEC/EN/GB/JIS conformed

Breaker ampere frame	Rated current (A)	Type	□: Available mounting and connection*
50	5	BW50EAG-3P005□	Blank, X, E, Y, P
	10	BW50EAG-3P010□	
	15	BW50EAG-3P015□	
	20	BW50EAG-3P020□	
	30	BW50EAG-3P030□	
	32	BW50EAG-3P032□	
	40	BW50EAG-3P040□	
	50	BW50EAG-3P050□	
63	60	BW63EAG-3P060□	Blank, X, E, Y, P
	63	BW63EAG-3P063□	
100	50	BW100EAG-3P050□	Blank, X, E, Y, P
	60	BW100EAG-3P060□	
	63	BW100EAG-3P063□	
	75	BW100EAG-3P075□	
	100	BW100EAG-3P100□	
160	125	BW160EAG-3P125□	Blank, X, E, P
	150	BW160EAG-3P150□	
	160	BW160EAG-3P160□	
250	175	BW250EAG-3P175□	Blank, X, E, P
	200	BW250EAG-3P200□	
	225	BW250EAG-3P225□	
	250	BW250EAG-3P250□	
400	250	BW400EAG-3P250□	Blank, X, E, P
	300	BW400EAG-3P300□	
	350	BW400EAG-3P350□	
	400	BW400EAG-3P400□	
630	500	BW630EAG-3P500□	Blank, X, E, P
	600	BW630EAG-3P600□	
	630	BW630EAG-3P630□	
800	700	BW800EAG-3P700□	Blank, X, E, P
	800	BW800EAG-3P800□	

● JAG series, 3-pole IEC/EN/GB/JIS conformed

Breaker ampere frame	Rated current (A)	Type	□: Available mounting and connection*
125	15	BW125JAG-3P015□	Blank, X, E, P
	20	BW125JAG-3P020□	
	30	BW125JAG-3P030□	
	40	BW125JAG-3P040□	
	50	BW125JAG-3P050□	
	60	BW125JAG-3P060□	
	75	BW125JAG-3P075□	
	100	BW125JAG-3P100□	
	125	BW125JAG-3P125□	
160	125	BW160JAG-3P125□	Blank, X, E, P
	150	BW160JAG-3P150□	
	160	BW160JAG-3P160□	
250	175	BW250JAG-3P175□	Blank, X, E, P
	200	BW250JAG-3P200□	
	225	BW250JAG-3P225□	
	250	BW250JAG-3P250□	

* See page 06/29.

● SAG series, 3-pole IEC/EN/GB/JIS conformed

Breaker ampere frame	Rated current (A)	Type	□: Available mounting and connection*
32	3	BW32SAG-3P003□	Blank, X, E, Y, P
	5	BW32SAG-3P005□	
	10	BW32SAG-3P010□	
	15	BW32SAG-3P015□	
	20	BW32SAG-3P020□	
	30	BW32SAG-3P030□	
	32	BW32SAG-3P032□	
50	5	BW50SAG-3P005□	Blank, X, E, Y, P
	10	BW50SAG-3P010□	
	15	BW50SAG-3P015□	
	20	BW50SAG-3P020□	
	30	BW50SAG-3P030□	
	32	BW50SAG-3P032□	
	40	BW50SAG-3P040□	
	50	BW50SAG-3P050□	
63	60	BW63SAG-3P060□	Blank, X, E, Y, P
	63	BW63SAG-3P063□	
125	15	BW125SAG-3P015□	Blank, X, E, P
	20	BW125SAG-3P020□	
	30	BW125SAG-3P030□	
	40	BW125SAG-3P040□	
	50	BW125SAG-3P050□	
	60	BW125SAG-3P060□	
	75	BW125SAG-3P075□	
	100	BW125SAG-3P100□	
	125	BW125SAG-3P125□	
160	125	BW160SAG-3P125□	Blank, X, E, P
	150	BW160SAG-3P150□	
	160	BW160SAG-3P160□	
250	175	BW250SAG-3P175□	Blank, X, E, P
	200	BW250SAG-3P200□	
	225	BW250SAG-3P225□	
	250	BW250SAG-3P250□	
400	250	BW400SAG-3P250□	Blank, X, E, P
	300	BW400SAG-3P300□	
	350	BW400SAG-3P350□	
	400	BW400SAG-3P400□	

● RAG series, 3-pole IEC/EN/GB/JIS conformed

Breaker ampere frame	Rated current (A)	Type	□: Available mounting and connection*
50	10	BW50RAG-3P010□	Blank, X, E, Y, P
	15	BW50RAG-3P015□	
	20	BW50RAG-3P020□	
	30	BW50RAG-3P030□	
	32	BW50RAG-3P032□	
	40	BW50RAG-3P040□	
	50	BW50RAG-3P050□	
63	60	BW63RAG-3P060□	Blank, X, E, Y, P
	63	BW63RAG-3P063□	
125	15	BW125RAG-3P015□	Blank, X, E, P
	20	BW125RAG-3P020□	
	30	BW125RAG-3P030□	
	40	BW125RAG-3P040□	
	50	BW125RAG-3P050□	
	60	BW125RAG-3P060□	
	75	BW125RAG-3P075□	
	100	BW125RAG-3P100□	
	125	BW125RAG-3P125□	
160	125	BW160RAG-3P125□	Blank, X, E, P
	150	BW160RAG-3P150□	
	160	BW160RAG-3P160□	
250	175	BW250RAG-3P175□	Blank, X, E, P
	200	BW250RAG-3P200□	
	225	BW250RAG-3P225□	
	250	BW250RAG-3P250□	
400	250	BW400RAG-3P250□	Blank, X, E, P
	300	BW400RAG-3P300□	
	350	BW400RAG-3P350□	
	400	BW400RAG-3P400□	
630	500	BW630RAG-3P500□	Blank, X, E, P
	600	BW630RAG-3P600□	
	630	BW630RAG-3P630□	
800	700	BW800RAG-3P700□	Blank, X, E, P
	800	BW800RAG-3P800□	

● HAG series, 3-pole IEC/EN/GB/JIS conformed

Breaker ampere frame	Rated current (A)	Type	□: Available mounting and connection*
400	250	BW400HAG-3P250□	Blank, X, E, P
	300	BW400HAG-3P300□	
	350	BW400HAG-3P350□	
	400	BW400HAG-3P400□	
630	500	BW630HAG-3P500□	Blank, X, E, P
	600	BW630HAG-3P600□	
	630	BW630HAG-3P630□	
800	700	BW800HAG-3P700□	Blank, X, E, P
	800	BW800HAG-3P800□	

* See page 06/29.

● JAG series, 4-pole IEC/EN/GB/JIS conformed

Breaker ampere frame	Rated current (A)	Type	□: Available mounting and connection*
125	15	BW125JAG-4P015□	Blank, X, E
	20	BW125JAG-4P020□	
	30	BW125JAG-4P030□	
	40	BW125JAG-4P040□	
	50	BW125JAG-4P050□	
	60	BW125JAG-4P060□	
	75	BW125JAG-4P075□	
	100	BW125JAG-4P100□	
	125	BW125JAG-4P125□	
160	125	BW160JAG-4P125□	Blank, X, E
	150	BW160JAG-4P150□	
	160	BW160JAG-4P160□	
250	175	BW250JAG-4P175□	Blank, X, E
	200	BW250JAG-4P200□	
	225	BW250JAG-4P225□	
	250	BW250JAG-4P250□	

● SAG series, 4-pole IEC/EN/GB/JIS conformed

Breaker ampere frame	Rated current (A)	Type	□: Available mounting and connection*
125	15	BW125SAG-3P015□	Blank, X, E
	20	BW125SAG-3P020□	
	30	BW125SAG-3P030□	
	40	BW125SAG-3P040□	
	50	BW125SAG-3P050□	
	60	BW125SAG-3P060□	
	75	BW125SAG-3P075□	
	100	BW125SAG-3P100□	
	125	BW125SAG-3P125□	
160	125	BW160SAG-3P125□	Blank, X, E
	150	BW160SAG-3P150□	
	160	BW160SAG-3P160□	
250	175	BW250SAG-3P175□	Blank, X, E
	200	BW250SAG-3P200□	
	225	BW250SAG-3P225□	
	250	BW250SAG-3P250□	

● RAG series, 4-pole IEC/EN/GB/JIS conformed

Breaker ampere frame	Rated current (A)	Type	□: Available mounting and connection*
125	15	BW125RAG-4P015□	Blank, X, E
	20	BW125RAG-4P020□	
	30	BW125RAG-4P030□	
	40	BW125RAG-4P040□	
	50	BW125RAG-4P050□	
	60	BW125RAG-4P060□	
	75	BW125RAG-4P075□	
	100	BW125RAG-4P100□	
	125	BW125RAG-4P125□	
160	125	BW160RAG-4P125□	Blank, X, E
	150	BW160RAG-4P150□	
	160	BW160RAG-4P160□	
250	175	BW250RAG-4P175□	Blank, X, E
	200	BW250RAG-4P200□	
	225	BW250RAG-4P225□	
	250	BW250RAG-4P250□	
400	250	BW400RAG-4P250□	Blank, X, E
	300	BW400RAG-4P300□	
	350	BW400RAG-4P350□	
	400	BW400RAG-4P400□	
630	500	BW630RAG-4P500□	Blank, X, E
	600	BW630RAG-4P600□	
	630	BW630RAG-4P630□	
800	700	BW800RAG-4P700□	Blank, X, E
	800	BW800RAG-4P800□	

● HAG series, 4-pole IEC/EN/GB/JIS conformed

Breaker ampere frame	Rated current (A)	Type	□: Available mounting and connection*
400	250	BW400HAG-4P250□	Blank, X, E
	300	BW400HAG-4P300□	
	350	BW400HAG-4P350□	
	400	BW400HAG-4P400□	
630	500	BW630HAG-4P500□	Blank, X, E
	600	BW630HAG-4P600□	
	630	BW630HAG-4P630□	
800	700	BW800HAG-4P700□	Blank, X, E
	800	BW800HAG-4P800□	

* See page 06/29.

■ Type number, Global series (Line protection)

● EAGU series, 2-pole UL489 Listed

Breaker ampere frame	Rated current (A)	Type	□: Available mounting and connection
100	60	BW100EAGU-2P060□	Blank, SB, SF, S3
	63	BW100EAGU-2P063□	S4, S5, S6, S7, S8
	70	BW100EAGU-2P070□	
	75	BW100EAGU-2P075□	
	80	BW100EAGU-2P080□	
	90	BW100EAGU-2P090□	
	100	BW100EAGU-2P100□	
250	125	BW250EAGU-2P125□	Blank, SB, SF, S3
	150	BW250EAGU-2P150□	S4, S5, S6, S7, S8
	160	BW250EAGU-2P160□	
	175	BW250EAGU-2P175□	
	200	BW250EAGU-2P200□	
	225	BW250EAGU-2P225□	
	250	BW250EAGU-2P250□	
400	250	BW400EAGU-2P250□	Blank, SB, S7, S8
	300	BW400EAGU-2P300□	
	350	BW400EAGU-2P350□	
	400	BW400EAGU-2P400□	

● JAGU series, 2-pole UL489 Listed

Breaker ampere frame	Rated current (A)	Type	□: Available mounting and connection
125	15	BW125JAGU-2P015□	Blank, SB, SF, S3
	20	BW125JAGU-2P020□	S4, S5, S6, S7, S8
	30	BW125JAGU-2P030□	
	40	BW125JAGU-2P040□	
	50	BW125JAGU-2P050□	
	60	BW125JAGU-2P060□	
	70	BW125JAGU-2P070□	
	75	BW125JAGU-2P075□	
	80	BW125JAGU-2P080□	
	90	BW125JAGU-2P090□	
	100	BW125JAGU-2P100□	
	125	BW125JAGU-2P125□	
250	125	BW250JAGU-2P125□	Blank, SB, SF, S3
	150	BW250JAGU-2P150□	S4, S5, S6, S7, S8
	160	BW250JAGU-2P160□	
	175	BW250JAGU-2P175□	
	200	BW250JAGU-2P200□	
	225	BW250JAGU-2P225□	
	250	BW250JAGU-2P250□	

Terminal combination

□:	Terminal position		Breaker type		
Code	Line	Load	BW50	BW100,125,250	BW400,630,800
Blank	Screw	Screw	●	●	–
Blank	Flat terminal	Flat terminal	–	–	●
SB	Block terminal	Block terminal	–	●	●
SF	Flat terminal	Flat terminal	●	●	–
S3	Screw	Flat terminal	●	●	–
S4	Flat terminal	Screw	●	●	–
S5	Screw	Block terminal	–	●	–
S6	Block terminal	Screw	–	●	–
S7	Flat terminal	Block terminal	–	●	●
S8	Block terminal	Flat terminal	–	●	●

● SAGU series, 2-pole UL489 Listed

Breaker ampere frame	Rated current (A)	Type	□: Available mounting and connection
400	250	BW400SAGU-2P250□	Blank, SB, S7, S8
	300	BW400SAGU-2P300□	
	350	BW400SAGU-2P350□	
	400	BW400SAGU-2P400□	

● RAGU series, 2-pole UL489 Listed

Breaker ampere frame	Rated current (A)	Type	□: Available mounting and connection
50	3	BW50RAGU-2P003□	Blank, SF, S3, S4
	5	BW50RAGU-2P005□	
	10	BW50RAGU-2P010□	
	15	BW50RAGU-2P015□	
	20	BW50RAGU-2P020□	
	30	BW50RAGU-2P030□	
	32	BW50RAGU-2P032□	
	40	BW50RAGU-2P040□	
	50	BW50RAGU-2P050□	
125	15	BW125RAGU-2P015□	Blank, SB, SF, S3
	20	BW125RAGU-2P020□	S4, S5, S6, S7, S8
	30	BW125RAGU-2P030□	
	40	BW125RAGU-2P040□	
	50	BW125RAGU-2P050□	
	60	BW125RAGU-2P060□	
	70	BW125RAGU-2P070□	
	75	BW125RAGU-2P075□	
	80	BW125RAGU-2P080□	
	90	BW125RAGU-2P090□	
	100	BW125RAGU-2P100□	
	125	BW125RAGU-2P125□	
250	125	BW250RAGU-2P125□	Blank, SB, SF, S3
	150	BW250RAGU-2P150□	S4, S5, S6, S7, S8
	160	BW250RAGU-2P160□	
	175	BW250RAGU-2P175□	
	200	BW250RAGU-2P200□	
	225	BW250RAGU-2P225□	
	250	BW250RAGU-2P250□	
400	250	BW400RAGU-2P250□	Blank, SB, S7, S8
	300	BW400RAGU-2P300□	
	350	BW400RAGU-2P350□	
	400	BW400RAGU-2P400□	

● HAGU series, 2-pole UL489 Listed

Breaker ampere frame	Rated current (A)	Type	□: Available mounting and connection
400	250	BW400HAGU-2P250□	Blank, SB, S7, S8
	300	BW400HAGU-2P300□	
	350	BW400HAGU-2P350□	
	400	BW400HAGU-2P400□	

● EAGU series, 3-pole UL489 Listed

Breaker ampere frame	Rated current (A)	Type	□: Available mounting and connection*
100	60	BW100EAGU-3P060□	Blank, SB, SF, S3
	63	BW100EAGU-3P063□	S4, S5, S6, S7, S8
	70	BW100EAGU-3P070□	
	75	BW100EAGU-3P075□	
	80	BW100EAGU-3P080□	
	90	BW100EAGU-3P090□	
	100	BW100EAGU-3P100□	
250	125	BW250EAGU-3P125□	Blank, SB, SF, S3
	150	BW250EAGU-3P150□	S4, S5, S6, S7, S8
	160	BW250EAGU-3P160□	
	175	BW250EAGU-3P175□	
	200	BW250EAGU-3P200□	
	225	BW250EAGU-3P225□	
	250	BW250EAGU-3P250□	
400	250	BW400EAGU-3P250□	Blank, SB, S7, S8
	300	BW400EAGU-3P300□	
	350	BW400EAGU-3P350□	
	400	BW400EAGU-3P400□	

● JAGU series, 3-pole UL489 Listed

Breaker ampere frame	Rated current (A)	Type	□: Available mounting and connection*
125	15	BW125JAGU-3P015□	Blank, SB, SF, S3
	20	BW125JAGU-3P020□	S4, S5, S6, S7, S8
	30	BW125JAGU-3P030□	
	40	BW125JAGU-3P040□	
	50	BW125JAGU-3P050□	
	60	BW125JAGU-3P060□	
	70	BW125JAGU-3P070□	
	75	BW125JAGU-3P075□	
	80	BW125JAGU-3P080□	
	90	BW125JAGU-3P090□	
	100	BW125JAGU-3P100□	
	125	BW125JAGU-3P125□	
250	125	BW250JAGU-3P125□	Blank, SB, SF, S3
	150	BW250JAGU-3P150□	S4, S5, S6, S7, S8
	160	BW250JAGU-3P160□	
	175	BW250JAGU-3P175□	
	200	BW250JAGU-3P200□	
	225	BW250JAGU-3P225□	
	250	BW250JAGU-3P250□	

● SAGU series, 3-pole UL489 Listed

Breaker ampere frame	Rated current (A)	Type	□: Available mounting and connection*
400	250	BW400SAGU-3P250□	Blank, SB, S7, S8
	300	BW400SAGU-3P300□	
	350	BW400SAGU-3P350□	
	400	BW400SAGU-3P400□	

● RAGU series, 3-pole UL489 Listed

Breaker ampere frame	Rated current (A)	Type	□: Available mounting and connection*
50	3	BW50RAGU-3P003□	Blank, SB, S3, S4
	5	BW50RAGU-3P005□	
	10	BW50RAGU-3P010□	
	15	BW50RAGU-3P015□	
	20	BW50RAGU-3P020□	
	30	BW50RAGU-3P030□	
	32	BW50RAGU-3P032□	
	40	BW50RAGU-3P040□	
	50	BW50RAGU-3P050□	
125	15	BW125RAGU-3P015□	Blank, SB, SF, S3
	20	BW125RAGU-3P020□	S4, S5, S6, S7, S8
	30	BW125RAGU-3P030□	
	40	BW125RAGU-3P040□	
	50	BW125RAGU-3P050□	
	60	BW125RAGU-3P060□	
	70	BW125RAGU-3P070□	
	75	BW125RAGU-3P075□	
	80	BW125RAGU-3P080□	
	90	BW125RAGU-3P090□	
	100	BW125RAGU-3P100□	
	125	BW125RAGU-3P125□	
250	125	BW250RAGU-3P125□	Blank, SB, SF, S3
	150	BW250RAGU-3P150□	S4, S5, S6, S7, S8
	160	BW250RAGU-3P160□	
	175	BW250RAGU-3P175□	
	200	BW250RAGU-3P200□	
	225	BW250RAGU-3P225□	
	250	BW250RAGU-3P250□	
400	250	BW400RAGU-3P250□	Blank, SB, S7, S8
	300	BW400RAGU-3P300□	
	350	BW400RAGU-3P350□	
	400	BW400RAGU-3P400□	
630	500	BW630RAGU-3P500□	Blank, SB, S7, S8
	600	BW630RAGU-3P600□	
	630	BW630RAGU-3P630□	
800	700	BW800RAGU-3P700□	Blank, SB, S7, S8
	800	BW800RAGU-3P800□	

● HAGU series, 3-pole UL489 Listed

Breaker ampere frame	Rated current (A)	Type	□: Available mounting and connection*
400	250	BW400HAGU-3P250□	Blank, SB, S7, S8
	300	BW400HAGU-3P300□	
	350	BW400HAGU-3P350□	
	400	BW400HAGU-3P400□	
630	500	BW630HAGU-3P500□	Blank, SB, S7, S8
	600	BW630HAGU-3P600□	
	630	BW630HAGU-3P630□	
800	700	BW800HAGU-3P700□	Blank, SB, S7, S8
	800	BW800HAGU-3P800□	

* See page 06/34.

■ Type number, Standard series (Motor protection)

● SAM series, 2-pole IEC/EN/GB/JIS conformed

Breaker ampere frame	Rated current (A)	Type	□: Available mounting and connection
32	0.7	BW32SAM-2P0P7□	Blank, X, E, Y, P
	1.4	BW32SAM-2P1P4□	
	2.6	BW32SAM-2P2P6□	
	4	BW32SAM-2P004□	
	8	BW32SAM-2P008□	
	10	BW32SAM-2P010□	
	16	BW32SAM-2P016□	
	24	BW32SAM-2P024□	
	32	BW32SAM-2P032□	

Mounting	Connection	□
Front	Front	Blank
Front	Rear	X
Flush	Rear	E
Flush	Top and buttom	Y
Plug-in		P

● AAM series, 3-pole IEC/EN/GB/JIS conformed

Breaker ampere frame	Rated current (A)	Type	□: Available mounting and connection
32	1.4	BW32AAM-3P1P4□	Blank, X, E, Y, P
	2.6	BW32AAM-3P2P6□	
	4	BW32AAM-3P004□	
	8	BW32AAM-3P008□	
	10	BW32AAM-3P010□	
	16	BW32AAM-3P016□	
	24	BW32AAM-3P024□	
	32	BW32AAM-3P032□	

● EAM series, 3-pole IEC/EN/GB/JIS conformed

Breaker ampere frame	Rated current (A)	Type	□: Available mounting and connection
50	24	BW50EAM-3P024□	Blank, X, E, Y, P
	32	BW50EAM-3P032□	
	40	BW50EAM-3P040□	
	45	BW50EAM-3P045□	
63	63	BW63EAM-3P063□	Blank, X, E, Y, P
100	63	BW100EAM-3P063□	Blank, X, E, Y, P
	75	BW100EAM-3P075□	
	90	BW100EAM-3P090□	
250	125	BW250EAM-3P125□	Blank, X, E, P
	150	BW250EAM-3P150□	
	175	BW250EAM-3P175□	
	225	BW250EAM-3P225□	

● JAM series, 3-pole IEC/EN/GB/JIS conformed

Breaker ampere frame	Rated current (A)	Type	□: Available mounting and connection
125	16	BW125JAM-3P016□	Blank, X, E, P
	24	BW125JAM-3P024□	
	32	BW125JAM-3P032□	
	40	BW125JAM-3P040□	
	60	BW125JAM-3P060□	
	75	BW125JAM-3P075□	
	90	BW125JAM-3P090□	
250	125	BW250JAM-3P125□	Blank, X, E, P
	150	BW250JAM-3P150□	
	175	BW250JAM-3P175□	
	225	BW250JAM-3P225□	

● **SAM series, 3-pole IEC/EN/GB/JIS conformed**

Breaker ampere frame	Rated current (A)	Type	□: Available mounting and connection*
32	0.7	BW32SAM-3P0P7□	Blank, X, E, Y, P
	1.4	BW32SAM-3P1P4□	
	2.6	BW32SAM-3P2P6□	
	4	BW32SAM-3P004□	
	8	BW32SAM-3P008□	
	10	BW32SAM-3P010□	
	16	BW32SAM-3P016□	
	24	BW32SAM-3P024□	
	32	BW32SAM-3P032□	
50	0.7	BW50SAM-3P0P7□	Blank, X, E, Y, P
	1.4	BW50SAM-3P1P4□	
	2	BW50SAM-3P002□	
	2.6	BW50SAM-3P2P6□	
	4	BW50SAM-3P004□	
	5	BW50SAM-3P005□	
	8	BW50SAM-3P008□	
	10	BW50SAM-3P010□	
	12	BW50SAM-3P012□	
	16	BW50SAM-3P016□	
	24	BW50SAM-3P024□	
	32	BW50SAM-3P032□	
	40	BW50SAM-3P040□	
	45	BW50SAM-3P045□	
63	63	BW63SAM-3P063□	Blank, X, E, Y, P

● **RAM series, 3-pole IEC/EN/GB/JIS conformed**

Breaker ampere frame	Rated current (A)	Type	□: Available mounting and connection*
50	0.7	BW50RAM-3P0P7□	Blank, X, E, Y, P
	1.4	BW50RAM-3P1P4□	
	2	BW50RAM-3P002□	
	2.6	BW50RAM-3P2P6□	
	4	BW50RAM-3P004□	
	5	BW50RAM-3P005□	
	8	BW50RAM-3P008□	
	10	BW50RAM-3P010□	
	12	BW50RAM-3P012□	
	16	BW50RAM-3P016□	
	24	BW50RAM-3P024□	
	32	BW50RAM-3P032□	
	40	BW50RAM-3P040□	
	45	BW50RAM-3P045□	
125	16	BW125RAM-3P016□	Blank, X, E, P
	24	BW125RAM-3P024□	
	32	BW125RAM-3P032□	
	40	BW125RAM-3P040□	
	60	BW125RAM-3P060□	
	75	BW125RAM-3P075□	
	90	BW125RAM-3P090□	
250	125	BW250RAM-3P125□	Blank, X, E, P
	150	BW250RAM-3P150□	
	175	BW250RAM-3P175□	
	225	BW250RAM-3P225□	

* See page 06/36.

■ **Arc space, mm**

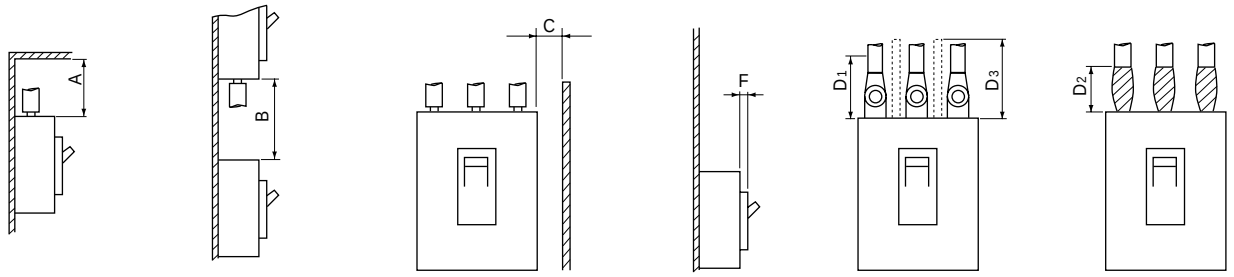

Frame size	MCCB basic type	Ceiling distance A		Vertical distance B		Side plate distance C		Front plate distance Painted F		Front plate distance No painted F		Taping Crimp type terminal lug D1	Taping Bus-bar D2	Barrier D3
		440V	230V	440V	230V	440V	230V	440V	230V	440V	230V			
32A	BW32A	–	10	–	10	–	10	–	0	–	0	Exposed live part dimension +20	10	10
	BW32S	10	10	30	30	20	15	0	0	0	0		30	30
50A	BW50A	–	10	–	10	–	10	–	0	–	0		10	10
	BW50E	10	10	30	30	25	15	0	0	0	0		30	30
	BW50S	30	10	40	40	25	15	0	0	0	0		30	30
	BW50R	50	25	50	50	25	15	0	0	10	5		50	50
	BW50H	60	60	80	80	50	20	5	0	10	5		80	80
63A	BW63E	10	10	30	30	25	15	0	0	0	0		30	30
	BW63S	30	10	40	40	25	15	0	0	0	0		30	30
	BW63R	50	25	50	50	25	15	0	0	10	5		50	50
100A	BW100A	–	10	–	20	–	15	–	0	–	0		50	50
	BW100E	50	25	50	50	25	15	0	0	10	5		50	50
125A	BW125J	40	40	50	50	25	20	0	0	10	5		50	50
	BW125S	40	40	60	60	25	20	5	0	10	5		50	50
	BW125R	40	40	60	60	25	20	5	0	10	5		50	50
	BW125H	60	60	80	80	50	20	5	0	10	5		80	80
160A	BW160E	40	40	50	50	50	15	0	0	10	5		80	80
	BW160J	40	40	60	60	50	20	0	0	10	5		80	80
	BW160S	40	40	80	80	50	20	5	0	10	10		80	80
	BW160R	40	40	80	80	50	20	5	0	10	10		80	80
250A	BW250E	40	40	50	50	50	15	0	0	10	5		80	80
	BW250J	40	40	60	60	50	20	0	0	10	5		80	80
	BW250S	40	40	80	80	50	20	5	0	10	10		80	80
	BW250R	40	40	80	80	50	20	5	0	10	10		80	80
	BW250H	60	60	80	80	60	60	5	0	10	10		80	80
400A	BW400E	100	80	100	80	50	20	0	0	10	5		100	100
	BW400S	100	80	100	80	50	20	0	0	10	5		100	100
	BW400R	100	80	100	80	80	40	5	0	20	10		100	100
	BW400H	100	80	100	80	80	40	5	0	20	10		100	100
630A	BW630E	100	80	100	80	80	40	0	0	10	5		100	100
	BW630R	100	80	100	80	80	40	5	0	20	10		100	100
	BW630H	120	100	120	100	80	40	5	0	20	10		120	120
800A	BW800E	100	80	100	80	80	40	0	0	10	5		100	100
	BW800R	100	80	100	80	80	40	5	0	20	10		100	100
	BW800H	120	100	120	100	80	40	5	0	20	20		120	120

■ Dimensions, mm

● Front mounting, front connection

BW32□-2P, BW50□-2P

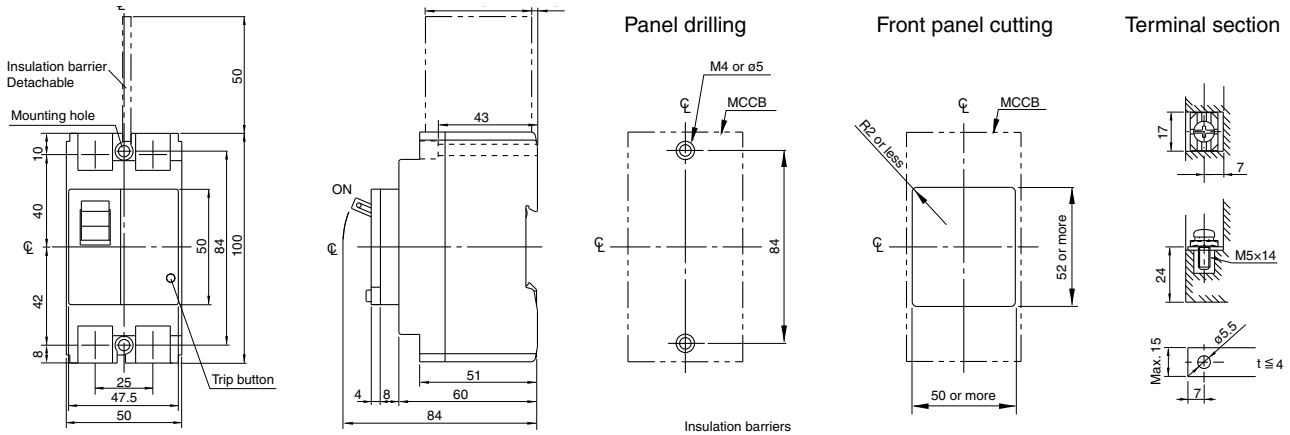

Insulation barriers
Standard provided: BW50SAG, BW50RAG
Optional: BW32AAG, BW32SAG, BW50EAG

BW32□-3P, BW50□-3P

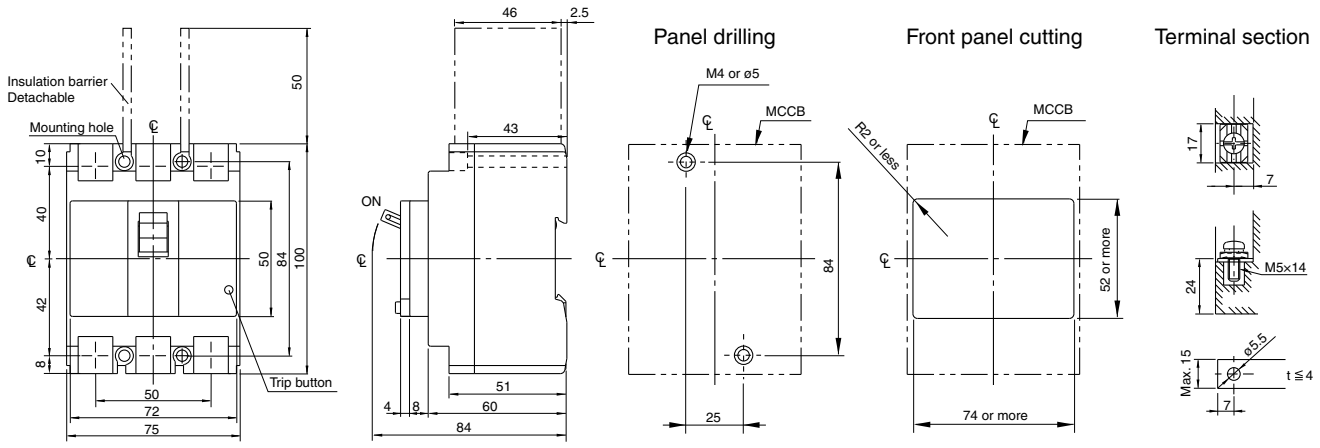

Insulation barriers
Standard provided: BW50SAG, BW50RAG
Optional: BW32AAG, BW32SAG, BW50EAG

BW63□-2P

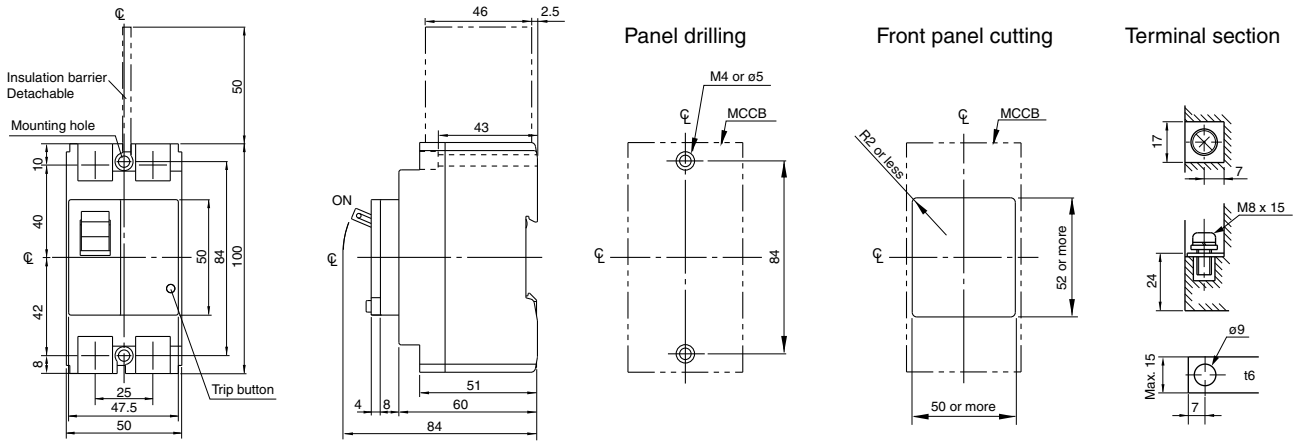

■ Dimensions, mm

● Front mounting, front connection

BW63□-3P

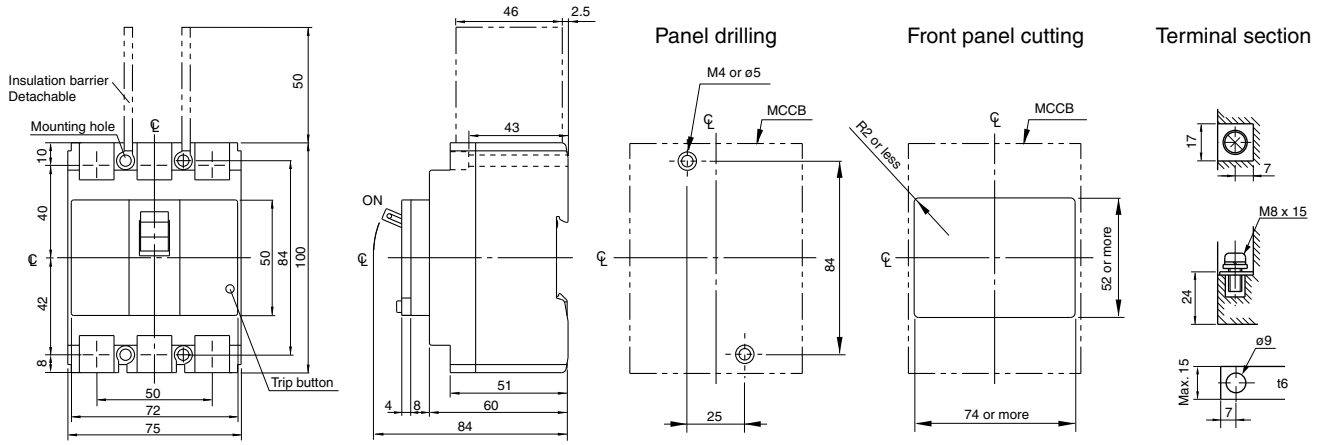

BW100□-2P

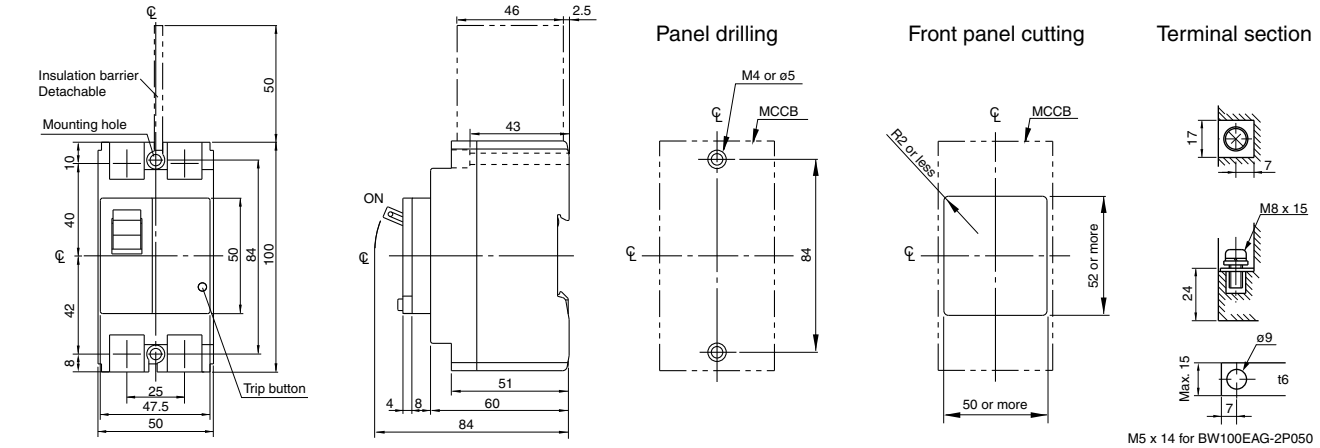

BW100□-3P

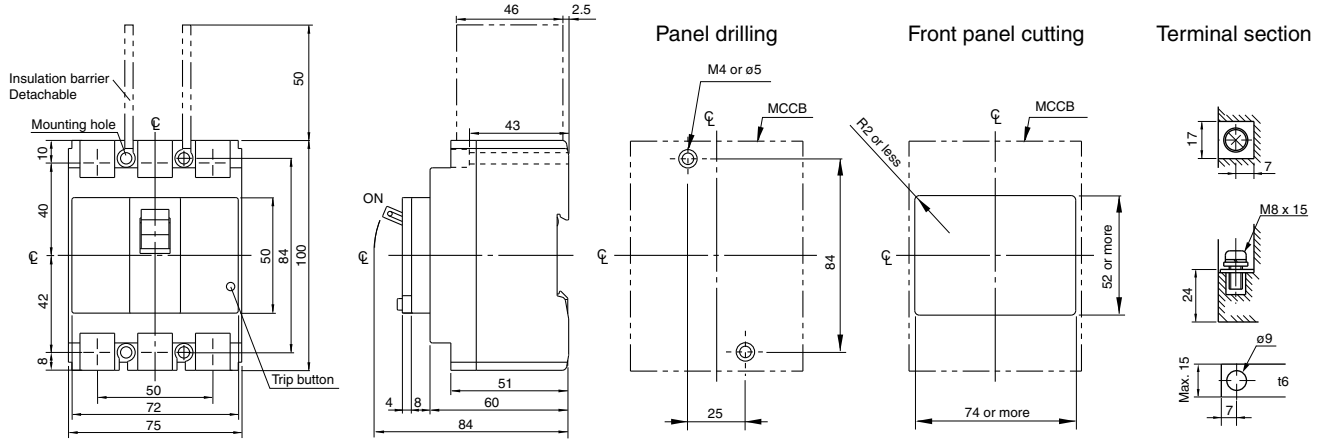

Insulation barriers
Standard provided: BW100EAG
Optional: BW100AAG

■ Dimensions, mm

● Front mounting, front connection

BW125JAG-2P

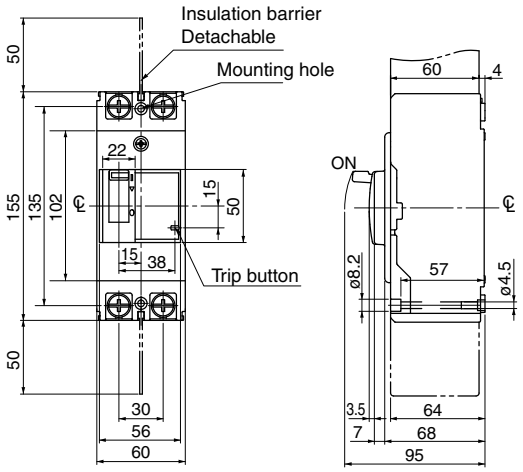

Panel drilling

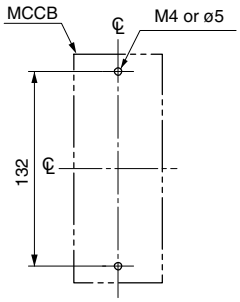

Front panel cutting

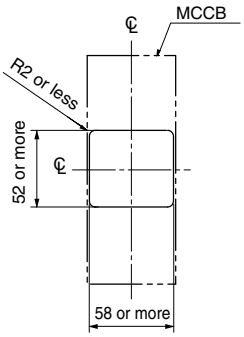

Terminal section

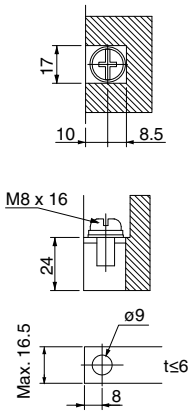

BW50HAG-2P, 3P, BW125JAG-3P,
BW125SAG-2P, 3P, BW125RAG-2P, 3P
BW125HAG-2P, 3P

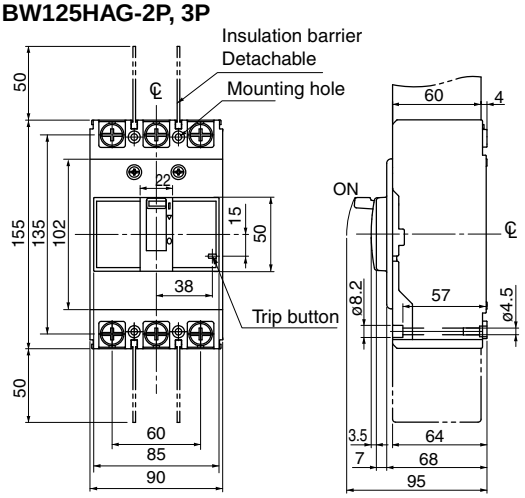

Panel drilling

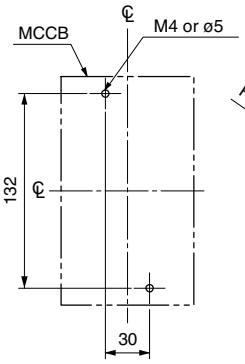

Front panel cutting

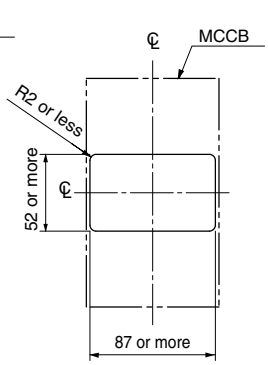

Terminal section

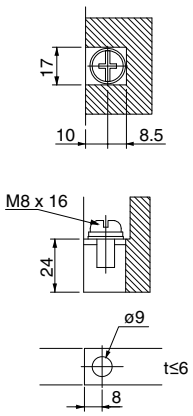

Note: 2-pole breaker is supplied in 3-pole frame with current carrying parts omitted from center pole.

BW125JAG-4P
BW125SAG-4P
BW125RAG-4P

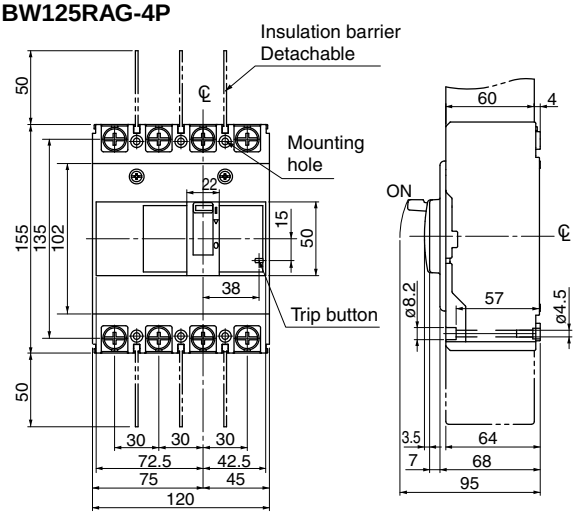

Panel drilling

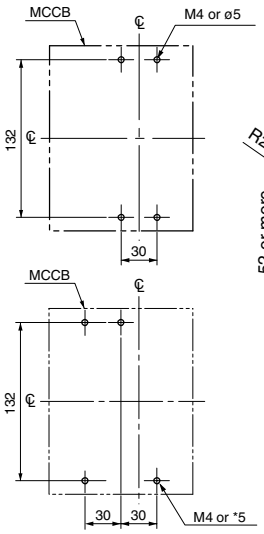

For V, N-type hadle

Front panel cutting

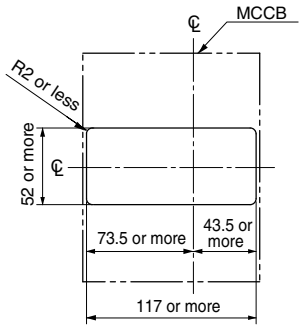

Terminal section

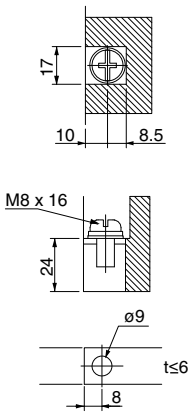

■ **Dimensions, mm**

● **Front mounting, front connection**

BW160□-2P, 3P
BW250□-2P, 3P

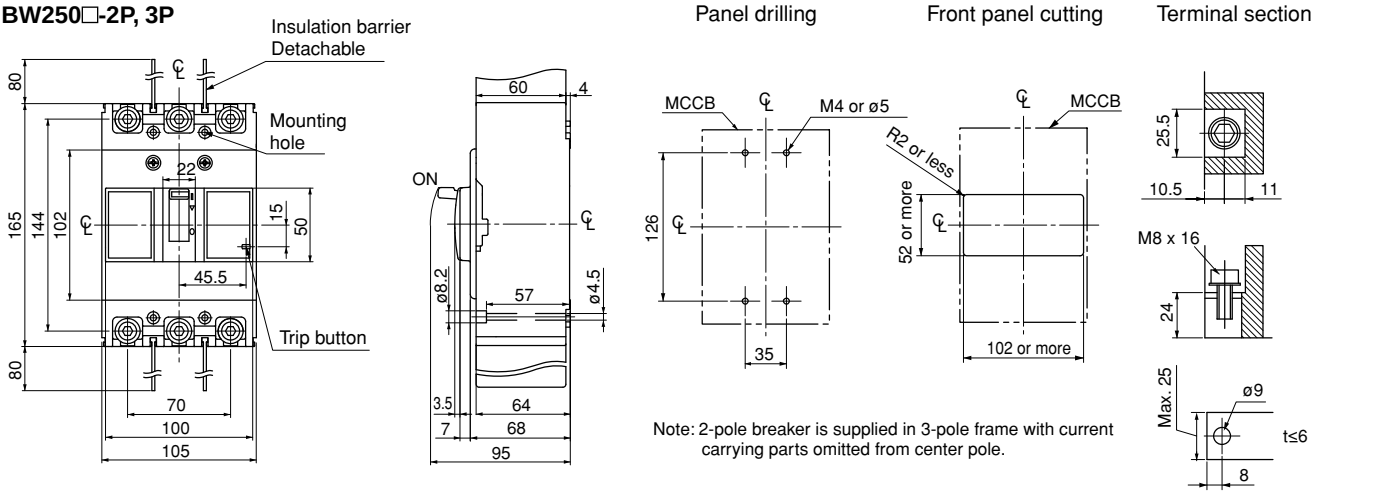

Note: 2-pole breaker is supplied in 3-pole frame with current carrying parts omitted from center pole.

BW160□-4P
BW250□-4P

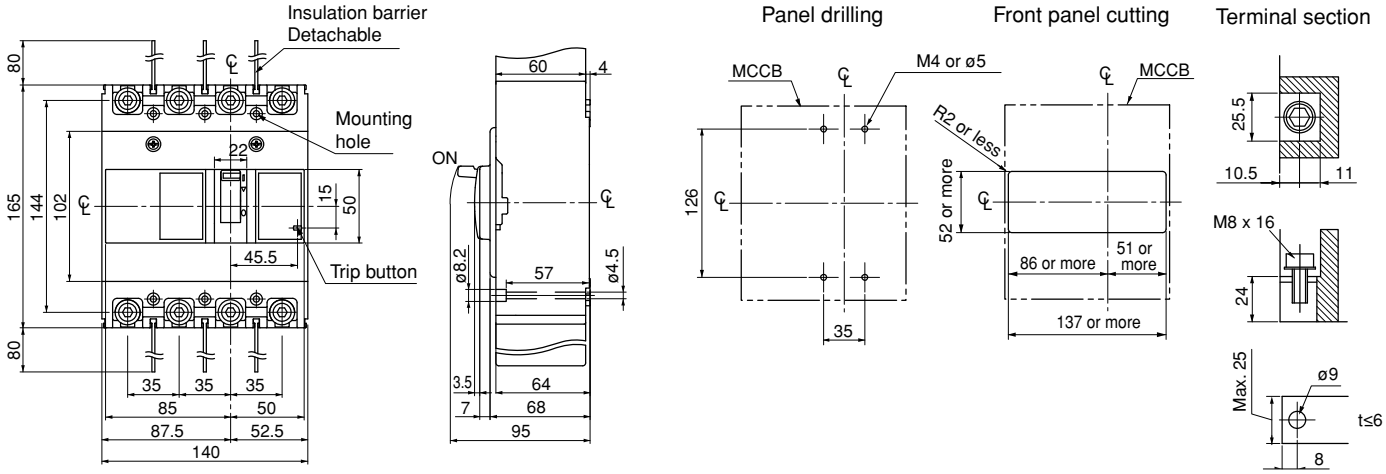

■ **Dimensions, mm**

● **Front mounting, front connection**

BW400□-2P, 3P

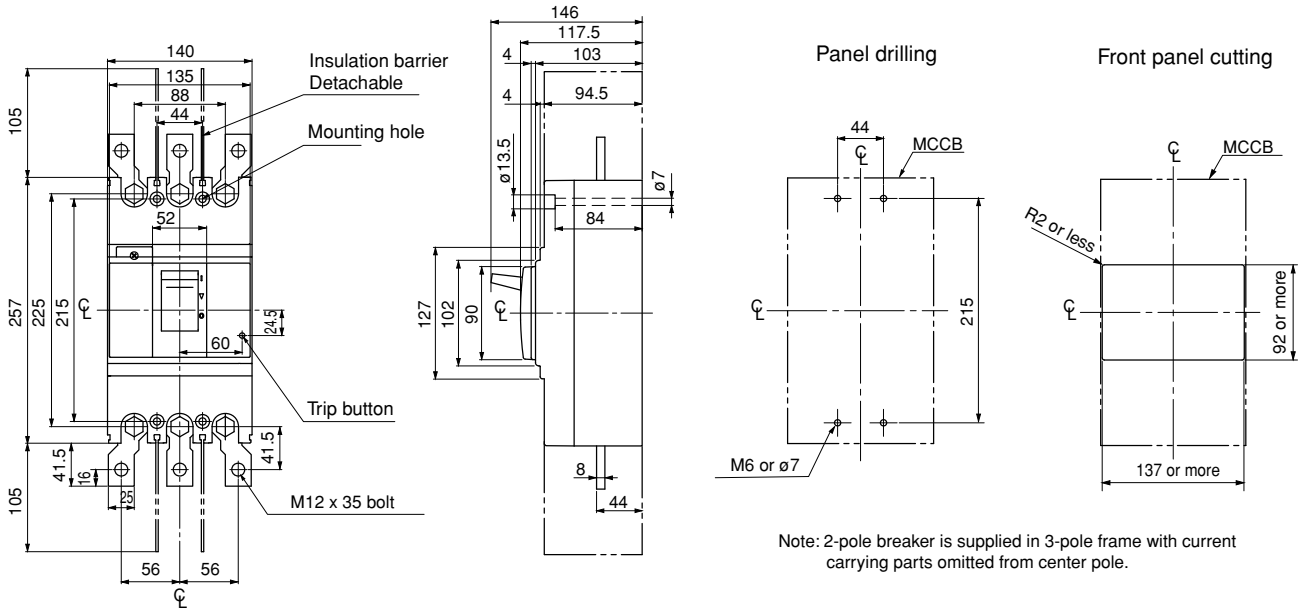

Note: 2-pole breaker is supplied in 3-pole frame with current carrying parts omitted from center pole.

06

BW400□-4P

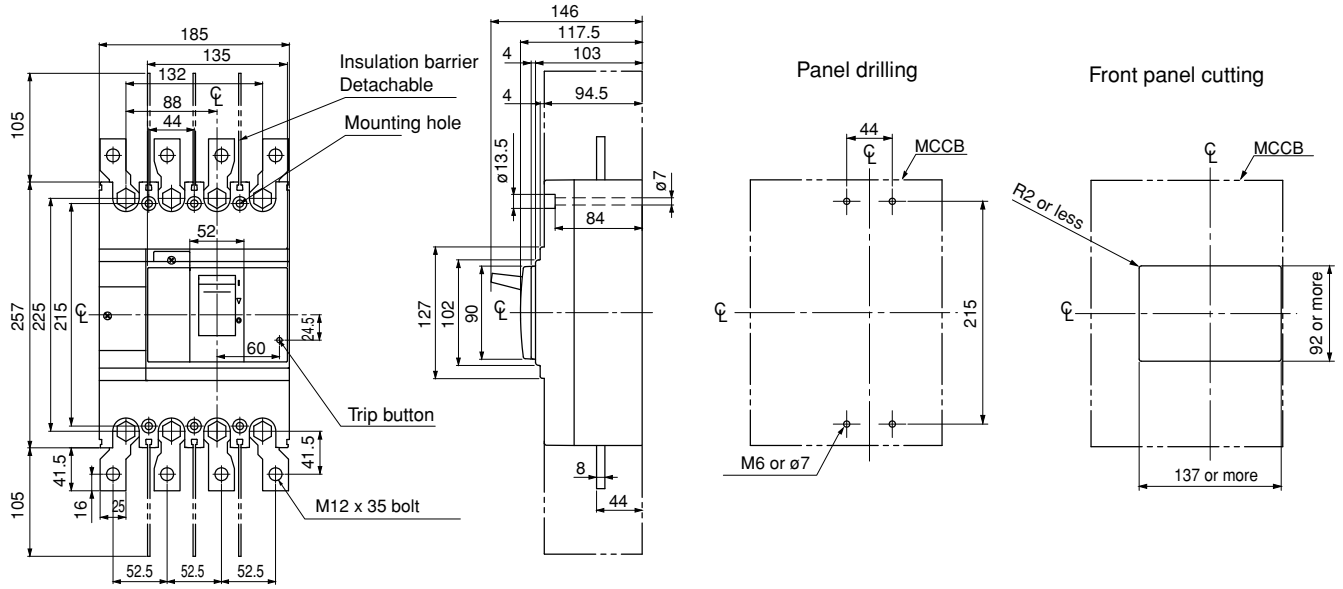

■ **Dimensions, mm**

● **Front mounting, front connection**

BW630□-3P

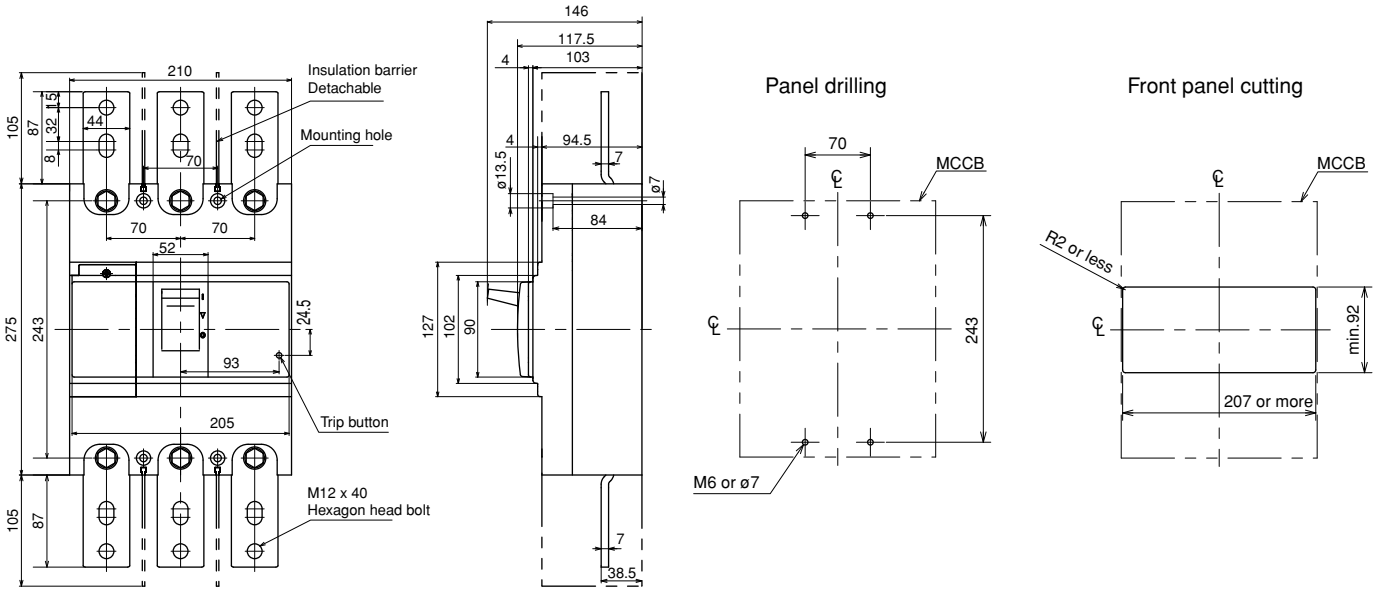

BW630□-4P

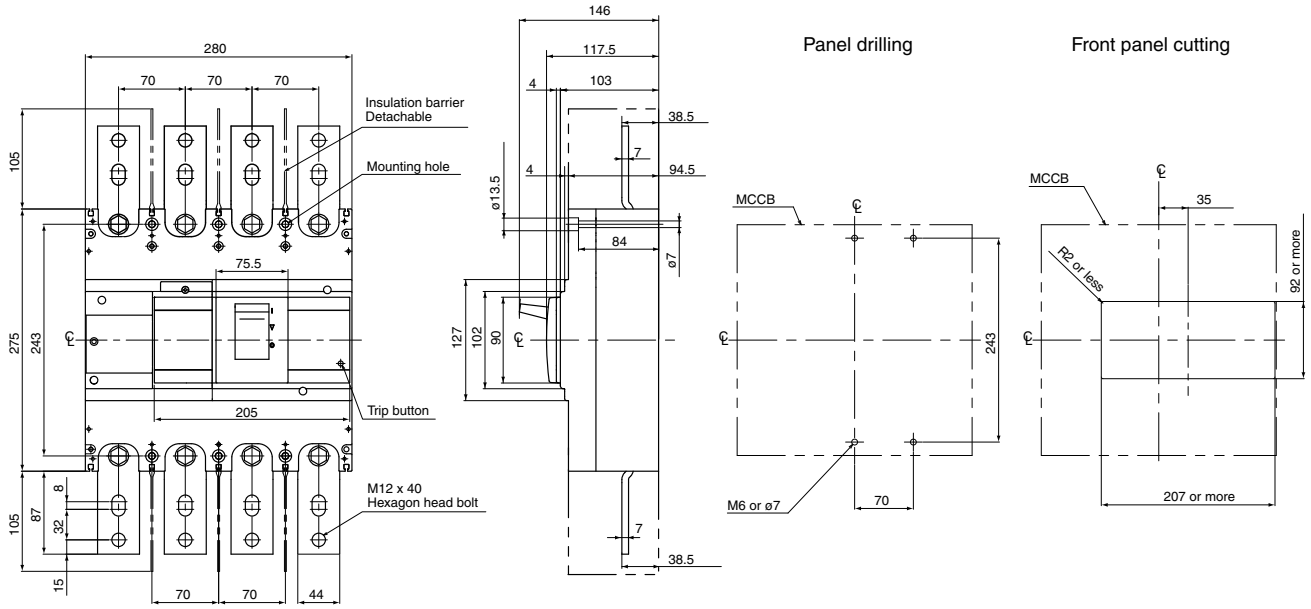

■ **Dimensions, mm**

● **Front mounting, front connection**

BW800□-3P

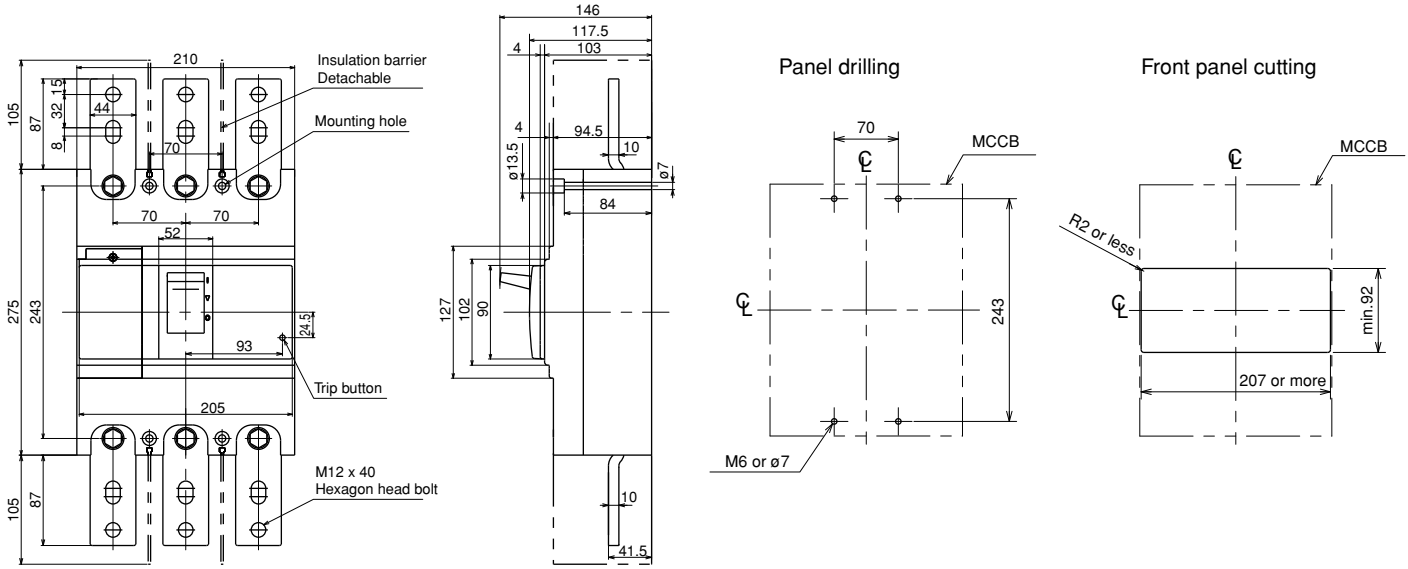

06

BW800□-4P

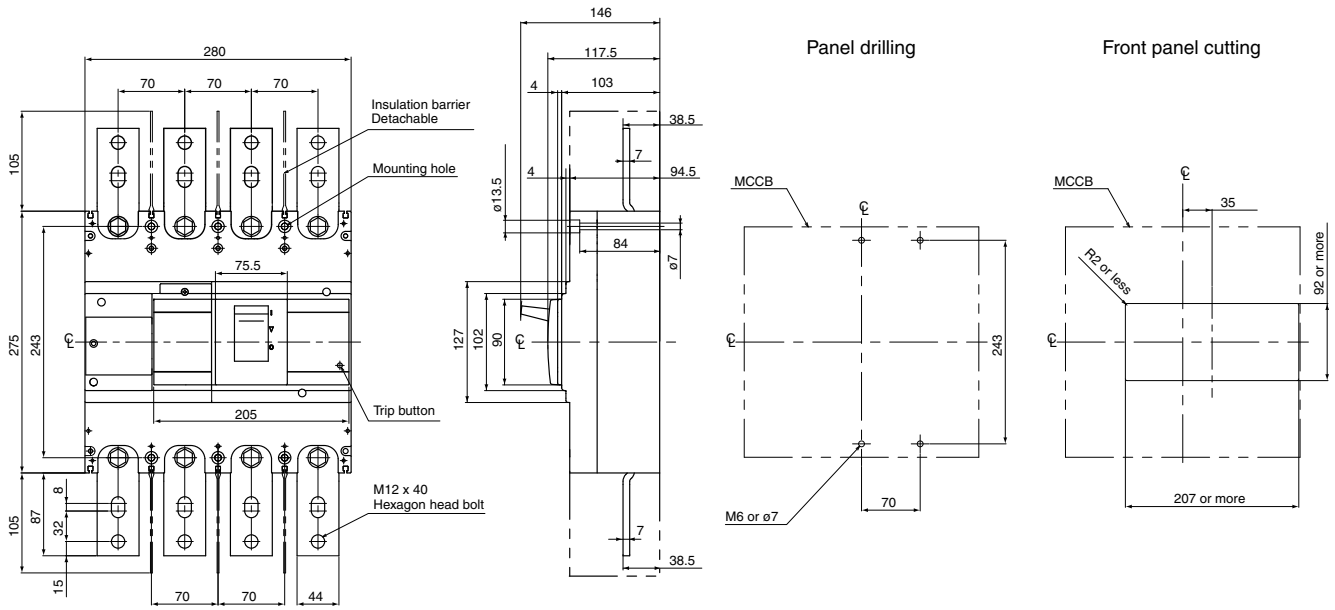

■ Dimensions, mm

● Front mounting, rear connection (type X)

BW32□-2P, BW50□-2P

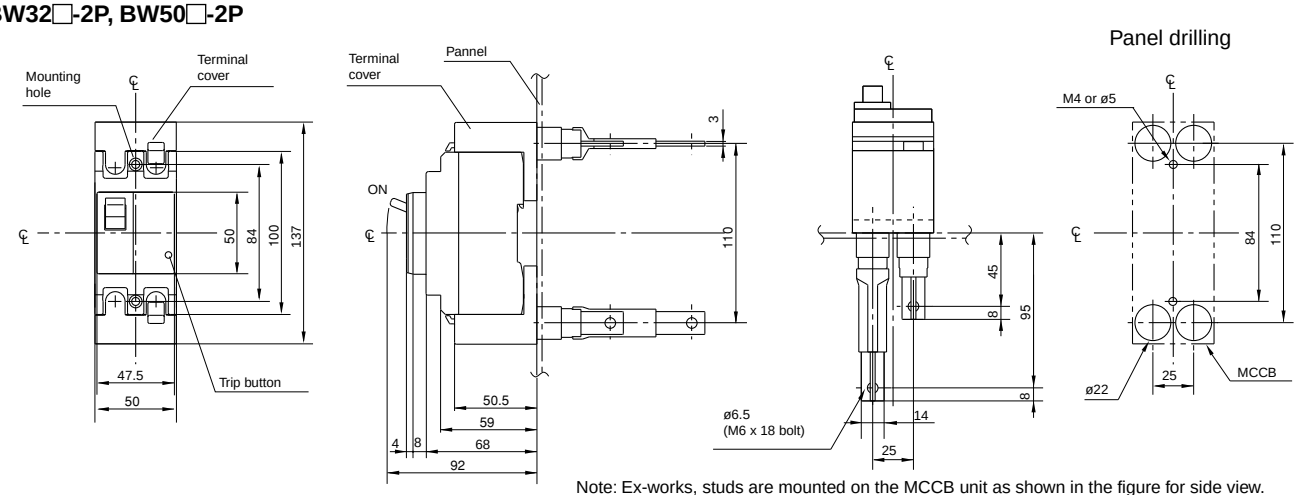

Note: Ex-works, studs are mounted on the MCCB unit as shown in the figure for side view.
•Studs for line side terminal : Mounted horizontally.
•Studs for load-side terminal : Mounted vertically.
Each stud can be turned by 90˚.

BW32□-3P, BW50□-3P

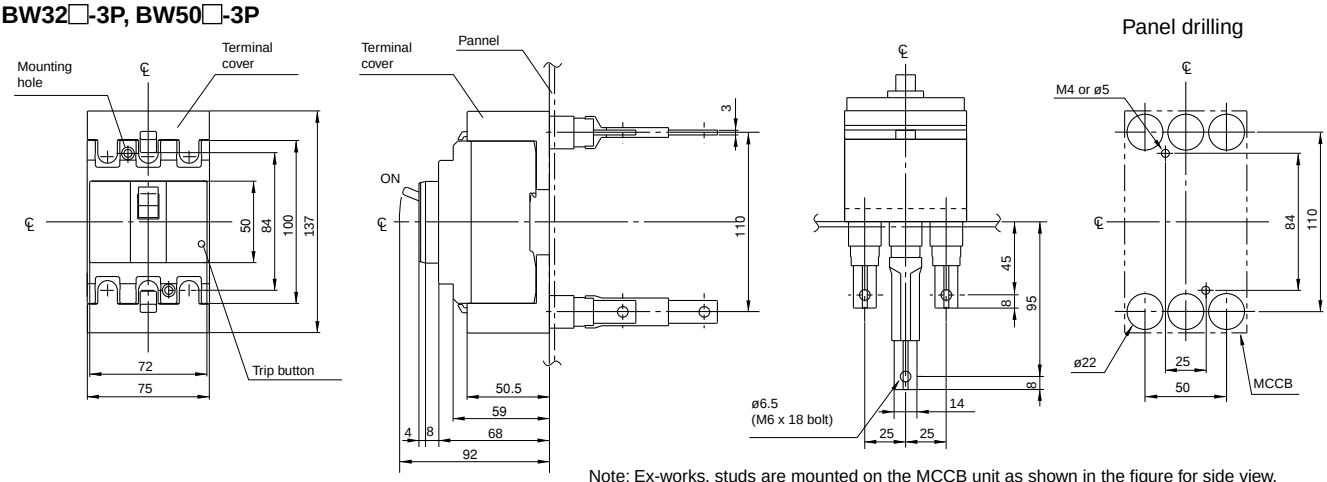

Note: Ex-works, studs are mounted on the MCCB unit as shown in the figure for side view.
•Studs for line side terminal : Mounted horizontally.
•Studs for load-side terminal : Mounted vertically.
Each stud can be turned by 90˚.
2-pole breaker is supplied in 3-pole frame with current carrying parts omitted from center pole.

BW63□-2P

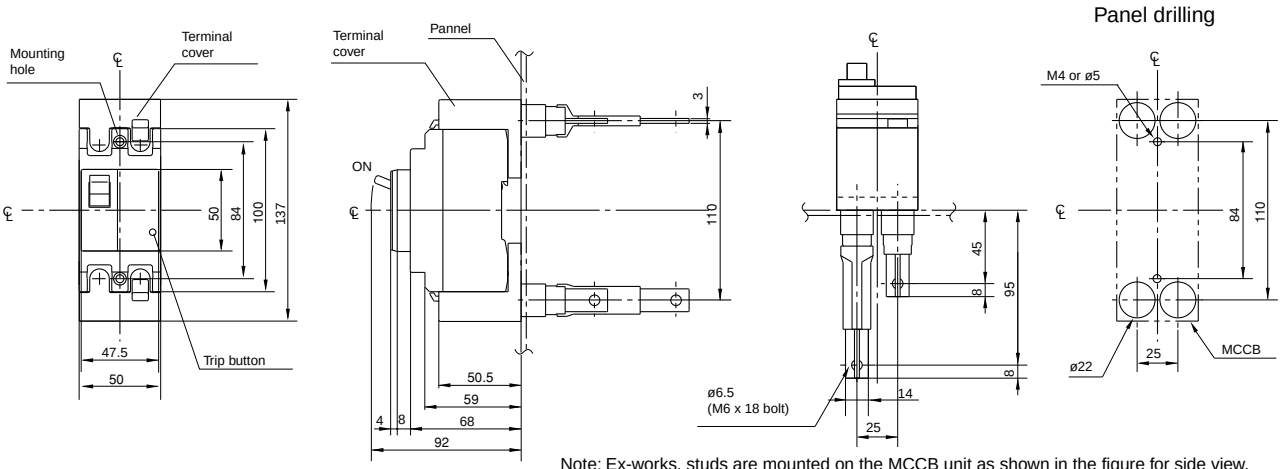

Note: Ex-works, studs are mounted on the MCCB unit as shown in the figure for side view.
•Studs for line side terminal : Mounted horizontally.
•Studs for load-side terminal : Mounted vertically.
Each stud can be turned by 90˚.

■ Dimensions, mm

● Front mounting, rear connection (type X)

BW63□-3P

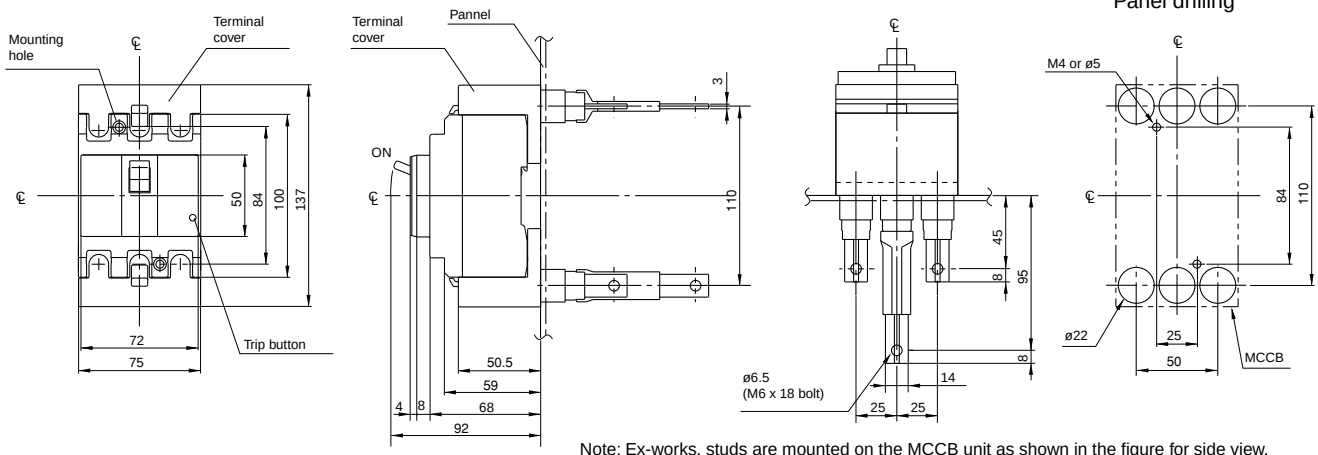

Note: Ex-works, studs are mounted on the MCCB unit as shown in the figure for side view.
•Studs for line side terminal : Mounted horizontally.
•Studs for load-side terminal : Mounted vertically.
Each stud can be turned by 90˚.
2-pole breaker is supplied in 3-pole frame with current carrying parts omitted from center pole.

BW100□-2P

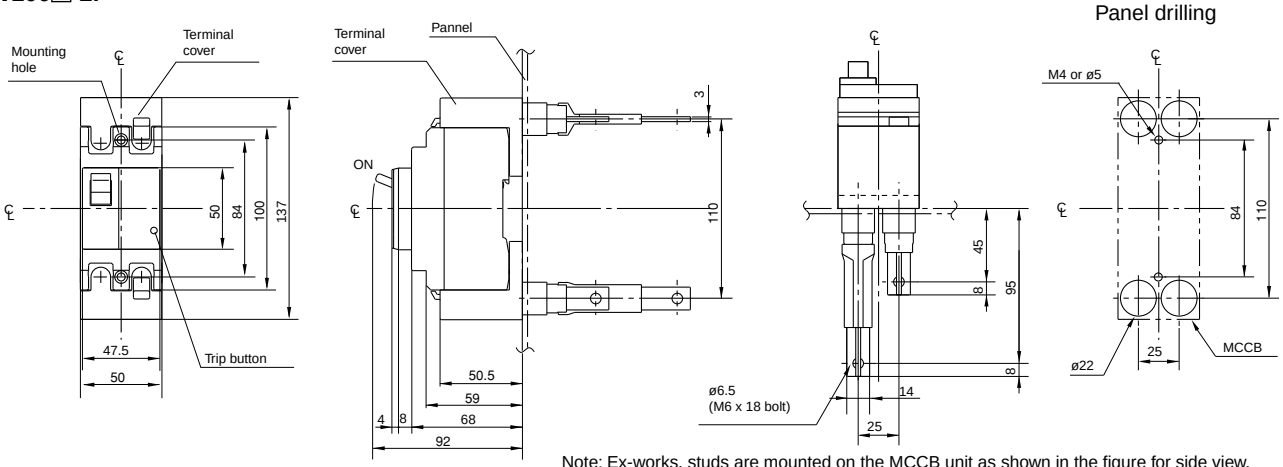

Note: Ex-works, studs are mounted on the MCCB unit as shown in the figure for side view.
•Studs for line side terminal : Mounted horizontally.
•Studs for load-side terminal : Mounted vertically.
Each stud can be turned by 90˚.

BW100□-3P

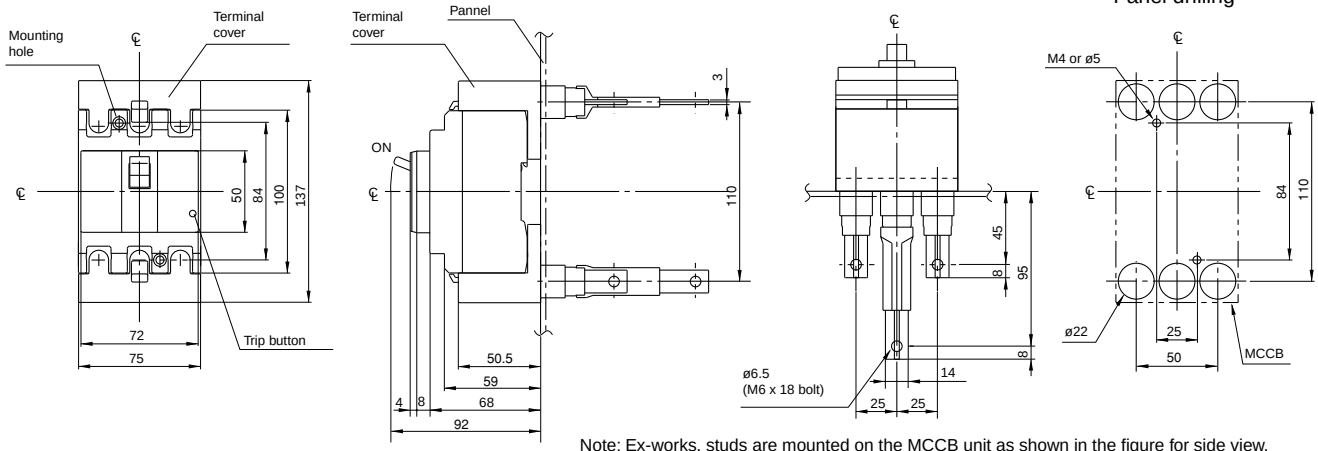

Note: Ex-works, studs are mounted on the MCCB unit as shown in the figure for side view.
•Studs for line side terminal : Mounted horizontally.
•Studs for load-side terminal : Mounted vertically.
Each stud can be turned by 90˚.
2-pole breaker is supplied in 3-pole frame with current carrying parts omitted from center pole.

■ Dimensions, mm

● Front mounting, rear connection (type X)

BW125JAG-2P

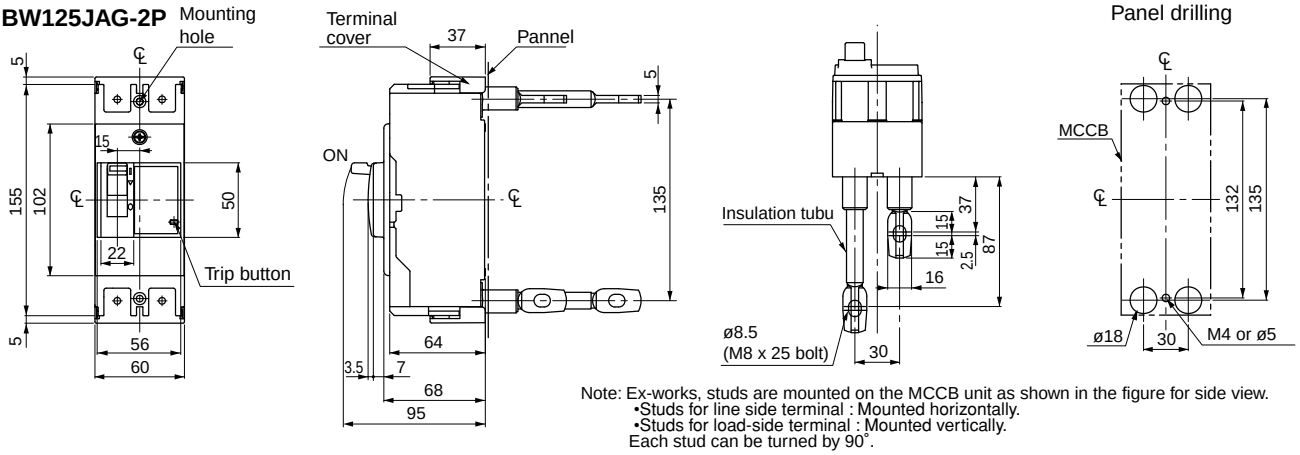

Note: Ex-works, studs are mounted on the MCCB unit as shown in the figure for side view.
•Studs for line side terminal : Mounted horizontally.
•Studs for load-side terminal : Mounted vertically.
Each stud can be turned by 90˚.

BW50HAG-2P, 3P, BW125JAG-3P
BW125SAG-2P, 3P, BW125RAG-2P, 3P
BW125HAG-2P, 3P

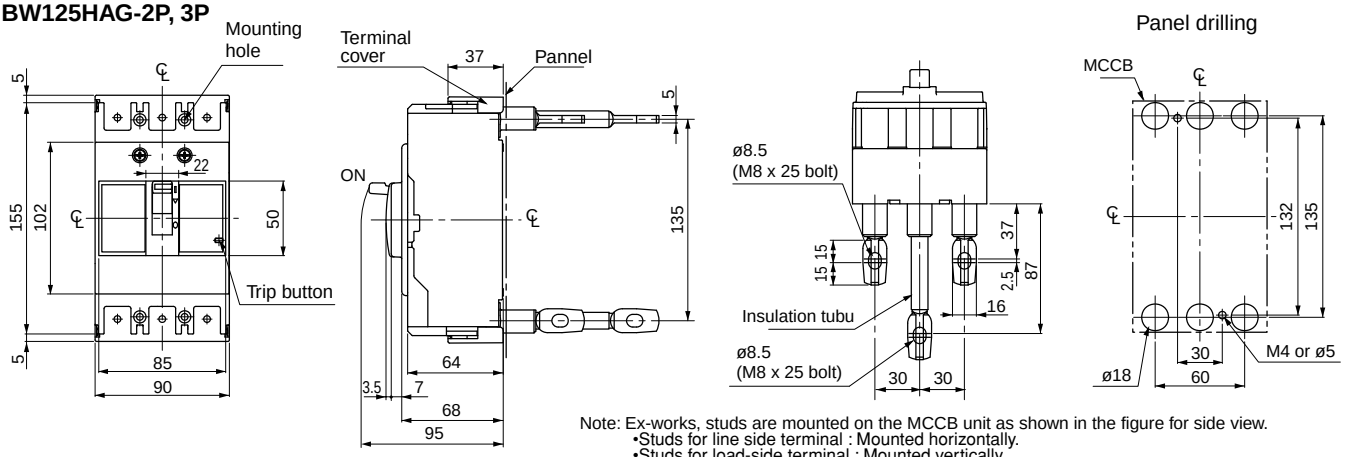

Note: Ex-works, studs are mounted on the MCCB unit as shown in the figure for side view.
•Studs for line side terminal : Mounted horizontally.
•Studs for load-side terminal : Mounted vertically.
Each stud can be turned by 90˚.
2-pole breaker is supplied in 3-pole frame with current carrying parts omitted from center pole.

BW125JAG-4P
BW125SAG-4P
BW125RAG-4P

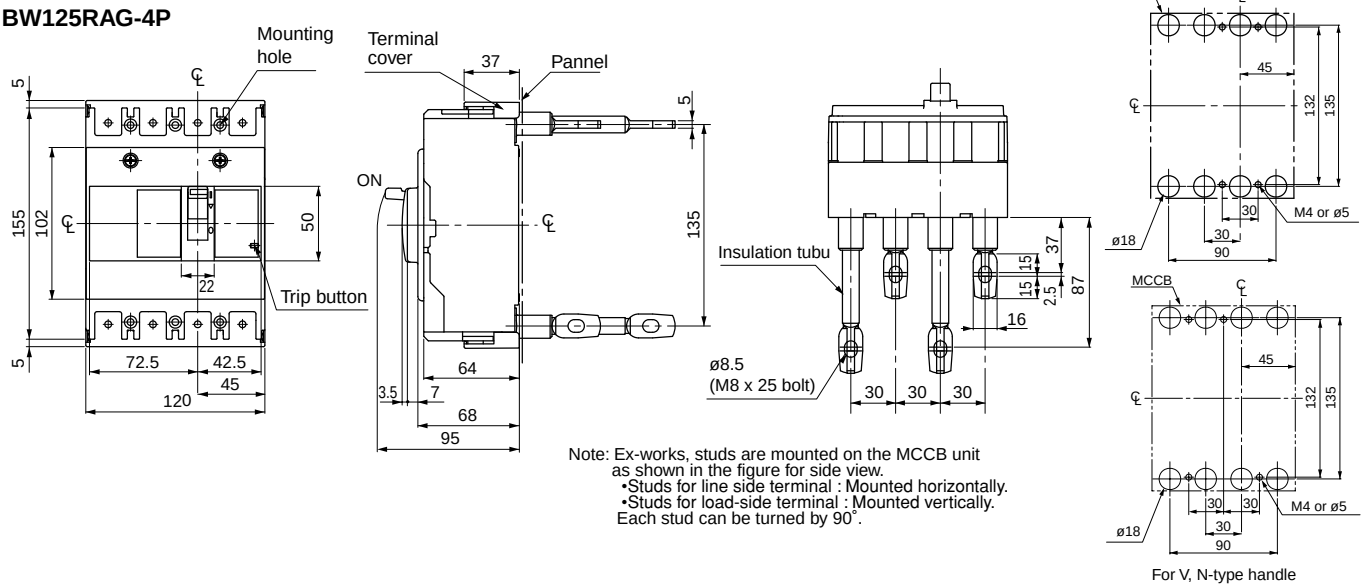

Note: Ex-works, studs are mounted on the MCCB unit as shown in the figure for side view.
•Studs for line side terminal : Mounted horizontally.
•Studs for load-side terminal : Mounted vertically.
Each stud can be turned by 90˚.

For V, N-type handle

■ **Dimensions, mm**

● **Front mounting, rear connection (type X)**

BW160□-2P, 3P
BW250□-2P, 3P

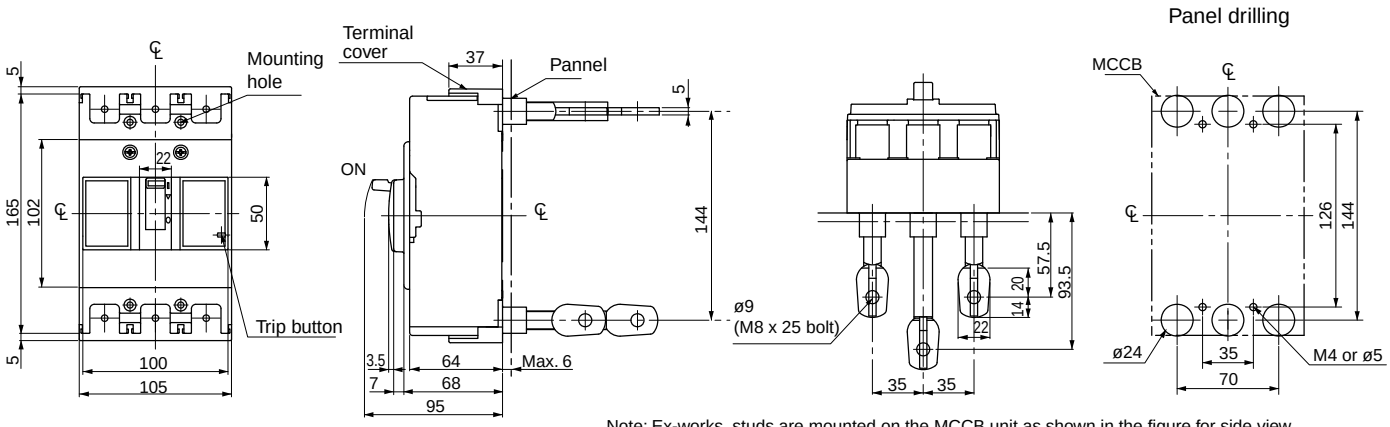

Note: Ex-works, studs are mounted on the MCCB unit as shown in the figure for side view.
•Studs for line side terminal : Mounted horizontally.
•Studs for load-side terminal : Mounted vertically.
Each stud can be turned by 90˚.
2-pole breaker is supplied in 3-pole frame with current carrying parts omitted from center pole.

BW160□-4P
BW250□-4P

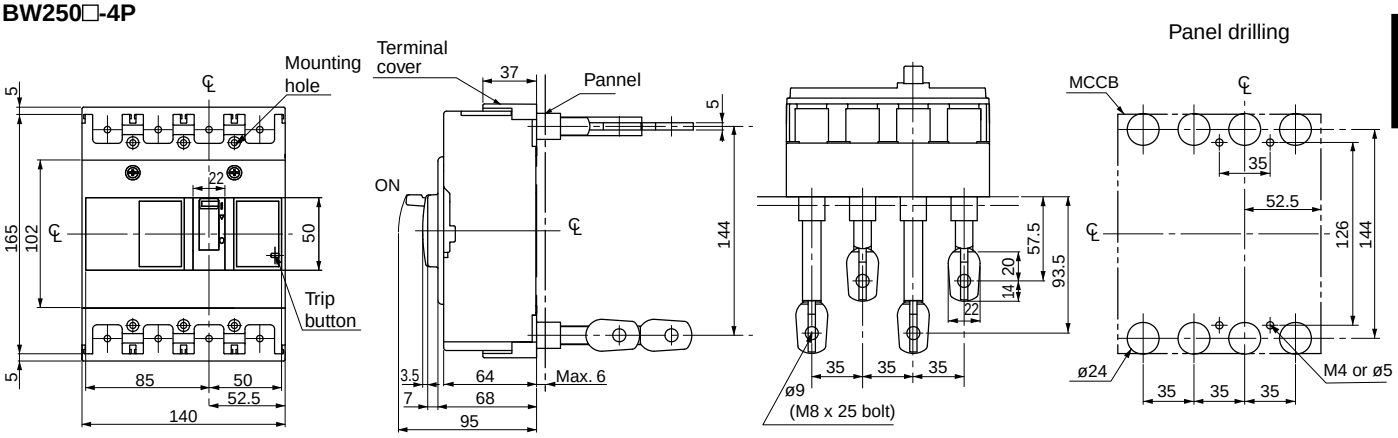

Note: Ex-works, studs are mounted on the MCCB unit as shown in the figure for side view.
•Studs for line side terminal : Mounted horizontally.
•Studs for load-side terminal : Mounted vertically.
Each stud can be turned by 90˚.

■ **Dimensions, mm**

● **Front mounting, rear connection (type X)**

BW400□-2P, 3P

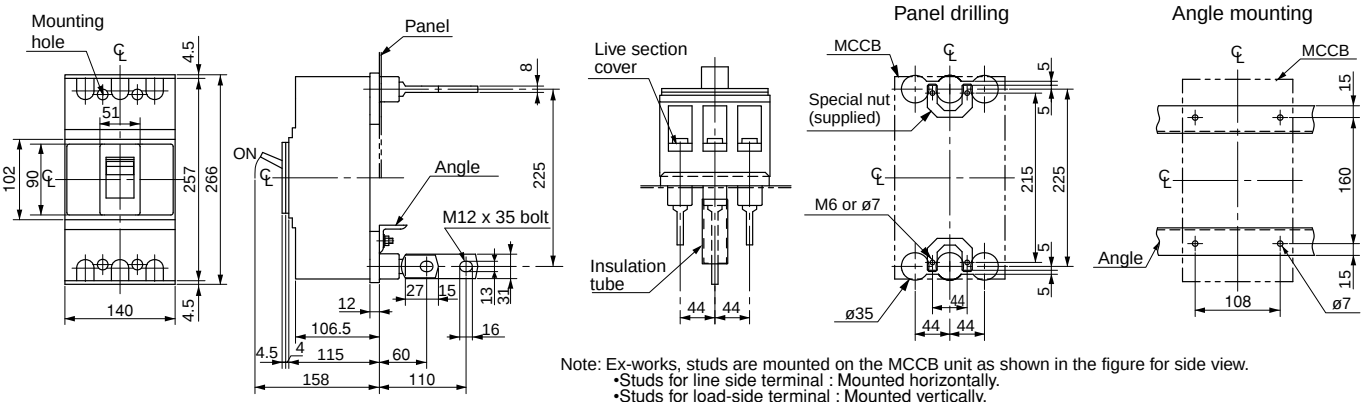

Note: Ex-works, studs are mounted on the MCCB unit as shown in the figure for side view.
•Studs for line side terminal : Mounted horizontally.
•Studs for load-side terminal : Mounted vertically.
Each stud can be turned by 90˚.
2-pole breaker is supplied in 3-pole frame with current carrying parts omitted from center pole.

BW400□-4P

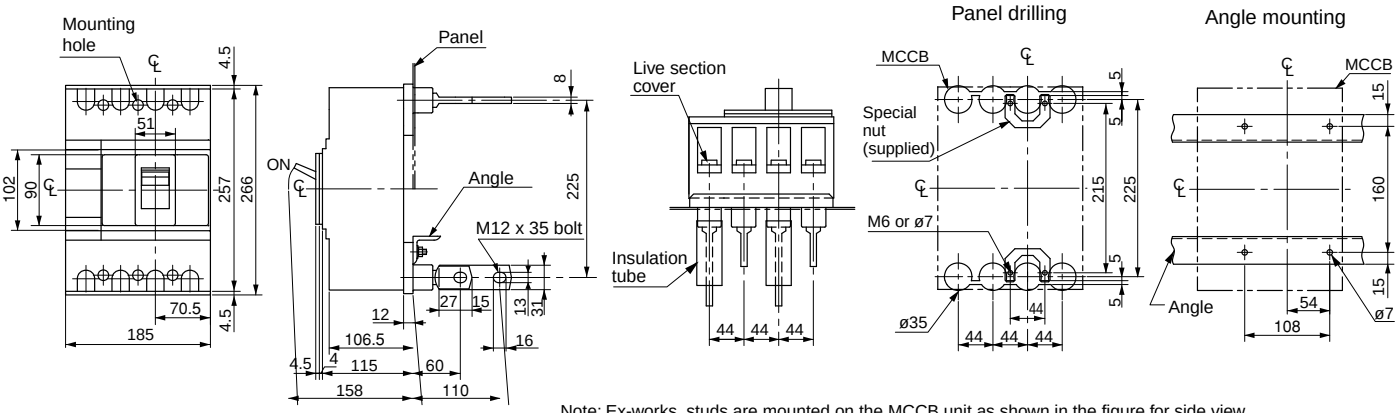

Note: Ex-works, studs are mounted on the MCCB unit as shown in the figure for side view.
•Studs for line side terminal : Mounted horizontally.
•Studs for load-side terminal : Mounted vertically.
Each stud can be turned by 90˚.

■ Dimensions, mm

● Front mounting, rear connection (type X)

BW630□-3P

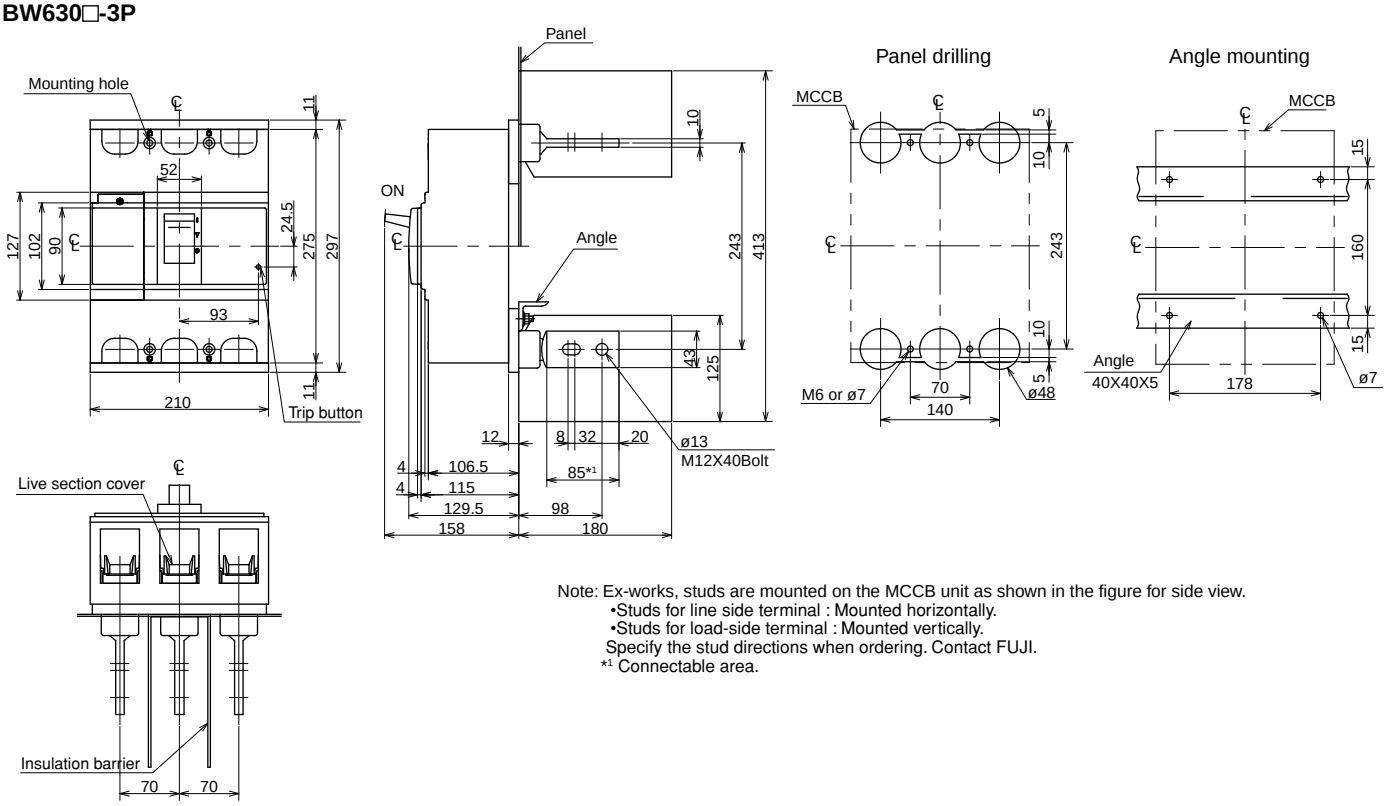

Note: Ex-works, studs are mounted on the MCCB unit as shown in the figure for side view.
•Studs for line side terminal : Mounted horizontally.
•Studs for load-side terminal : Mounted vertically.
Specify the stud directions when ordering. Contact FUJI.
*1 Connectable area.

06

BW630□-4P

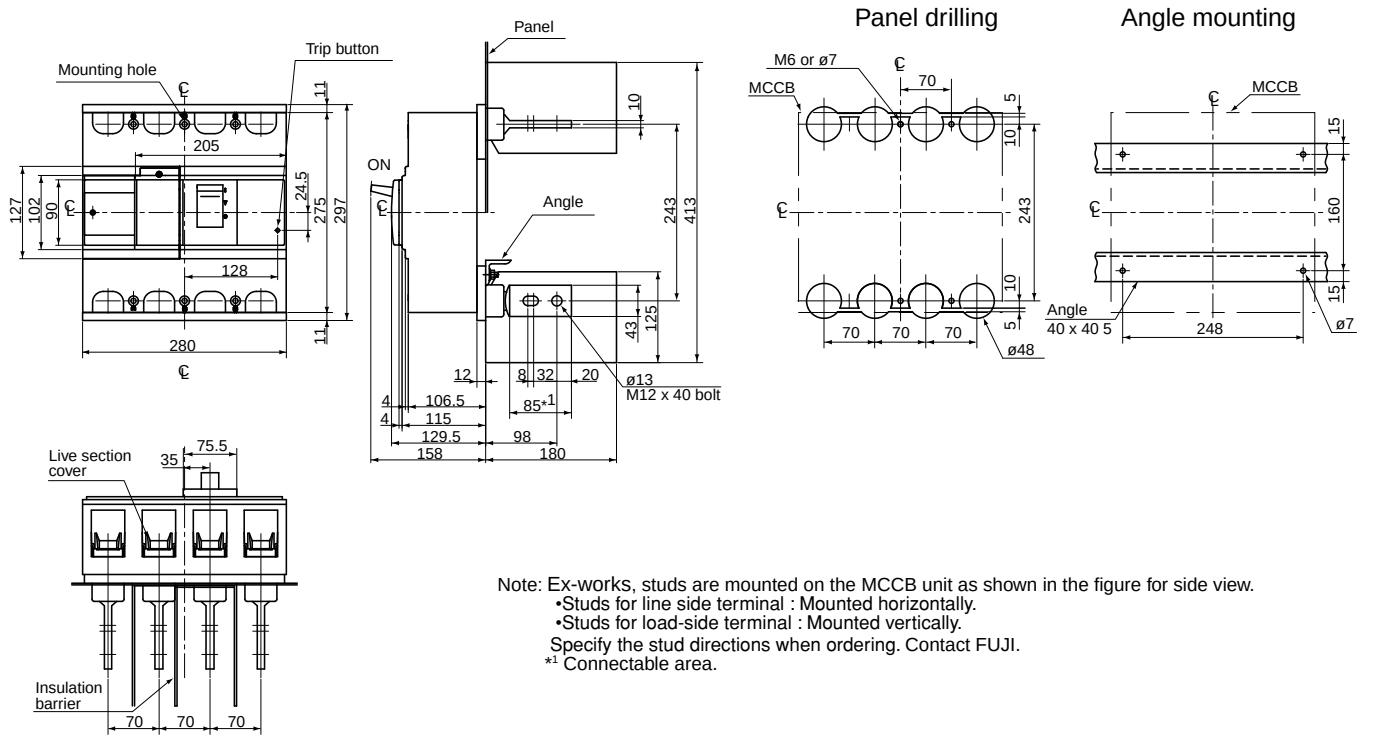

Note: Ex-works, studs are mounted on the MCCB unit as shown in the figure for side view.
•Studs for line side terminal : Mounted horizontally.
•Studs for load-side terminal : Mounted vertically.
Specify the stud directions when ordering. Contact FUJI.
*1 Connectable area.

■ Dimensions, mm

● Front mounting, rear connection (type X)

BW800□-3P

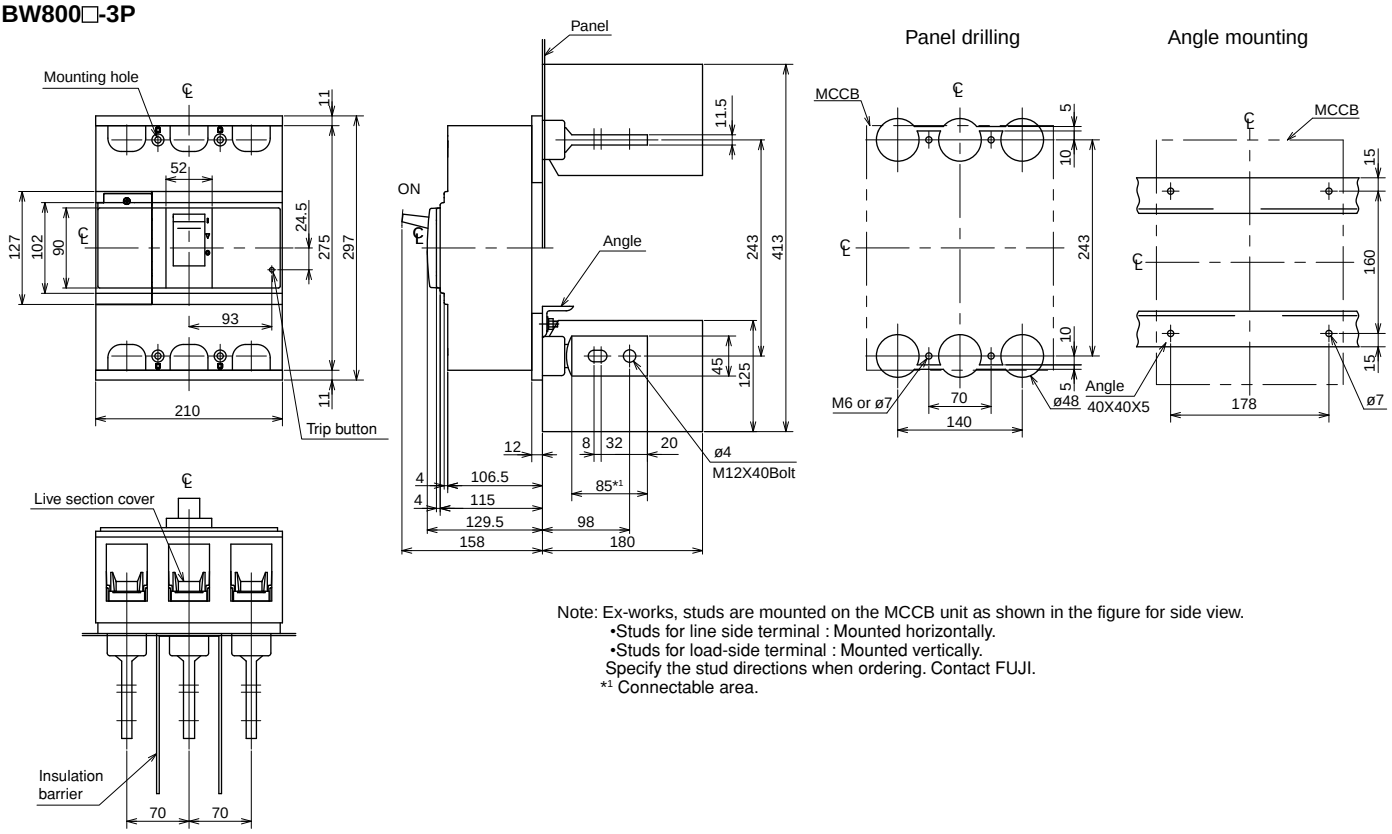

Note: Ex-works, studs are mounted on the MCCB unit as shown in the figure for side view.
•Studs for line side terminal : Mounted horizontally.
•Studs for load-side terminal : Mounted vertically.
Specify the stud directions when ordering. Contact FUJI.
*1 Connectable area.

BW800□-4P

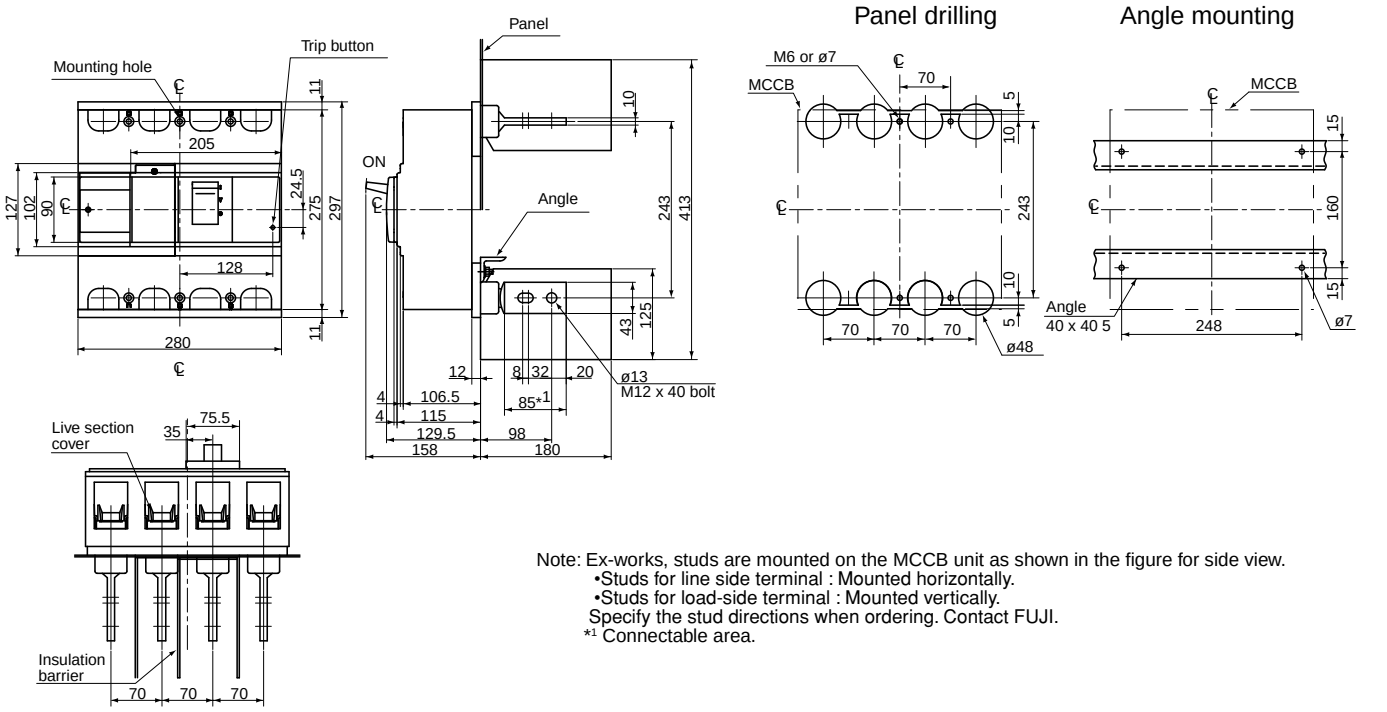

Note: Ex-works, studs are mounted on the MCCB unit as shown in the figure for side view.
•Studs for line side terminal : Mounted horizontally.
•Studs for load-side terminal : Mounted vertically.
Specify the stud directions when ordering. Contact FUJI.
*1 Connectable area.

■ **Dimensions, mm**

● **Front mounting, front connection**

BW50RAGU-2P

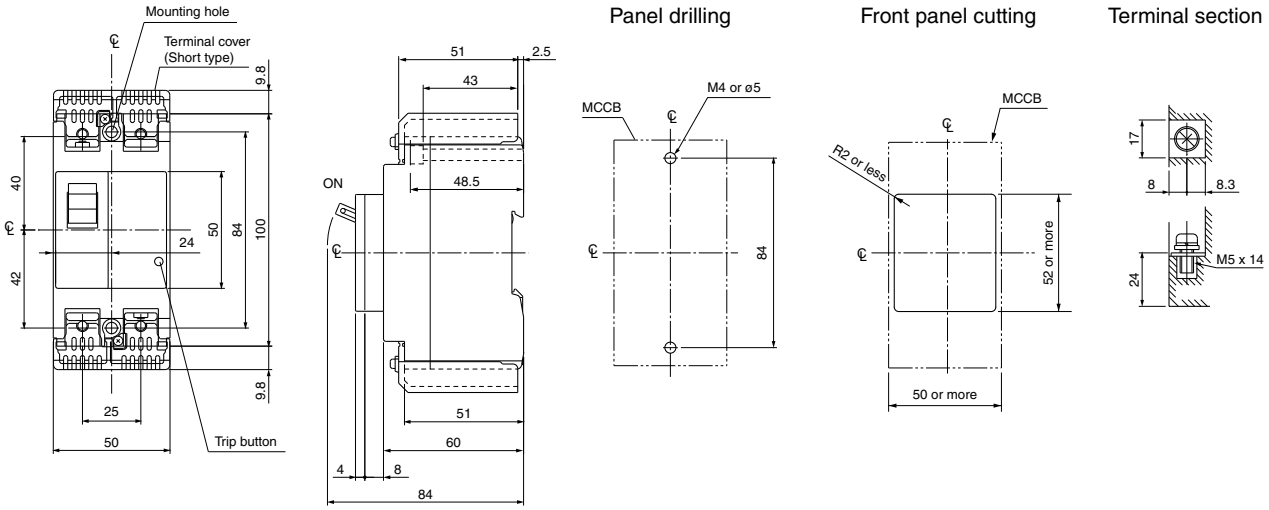

BW50RAGU-3P

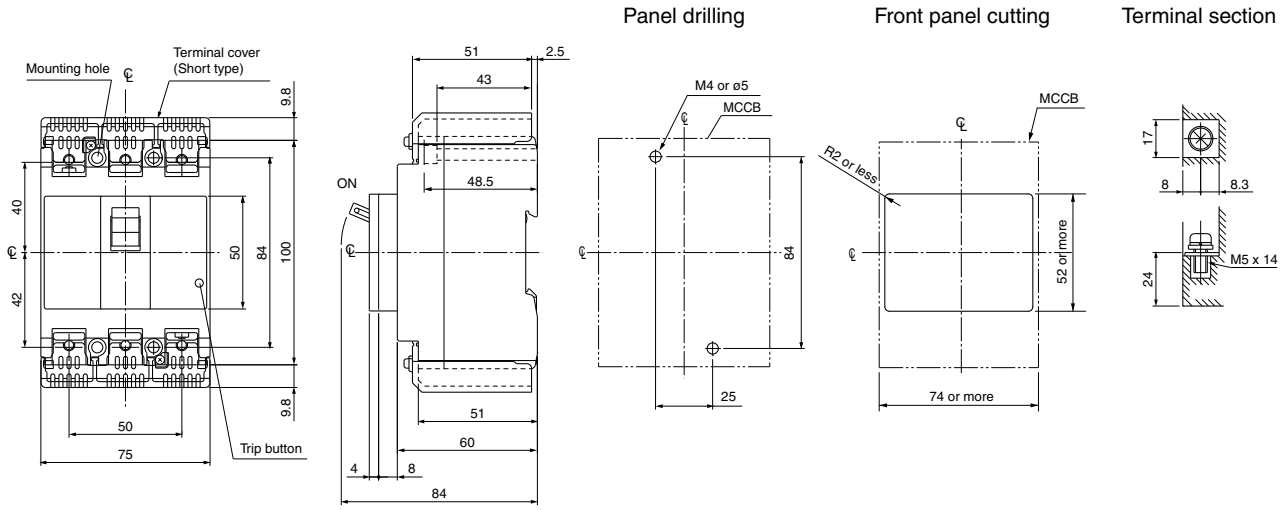

06

■ **Dimensions, mm**

● **Front mounting, front connection**

BW100EAGU-2P

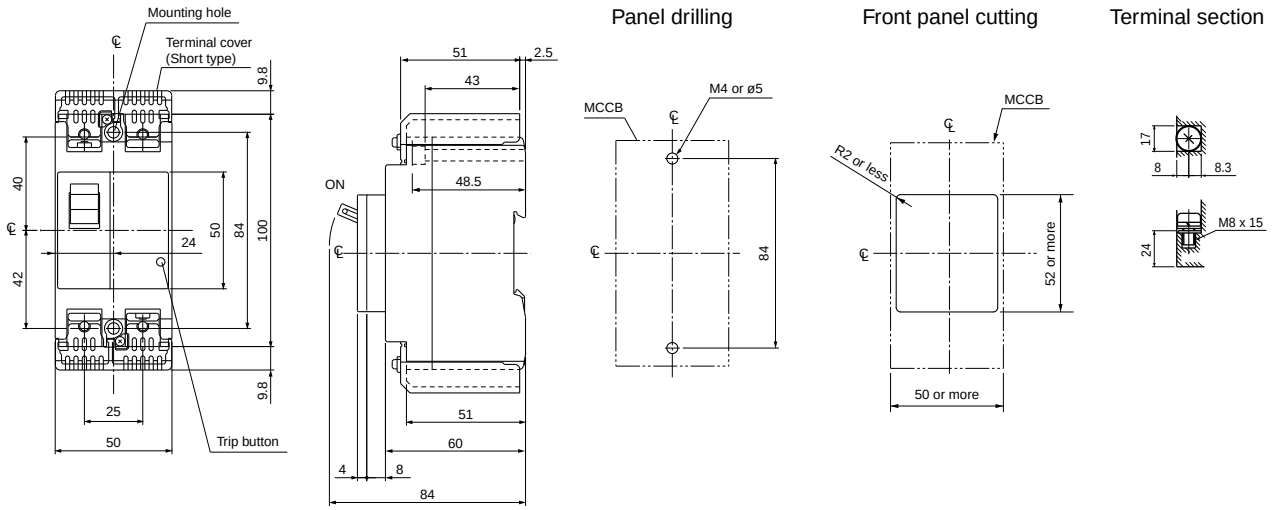

BW100EAGU-3P

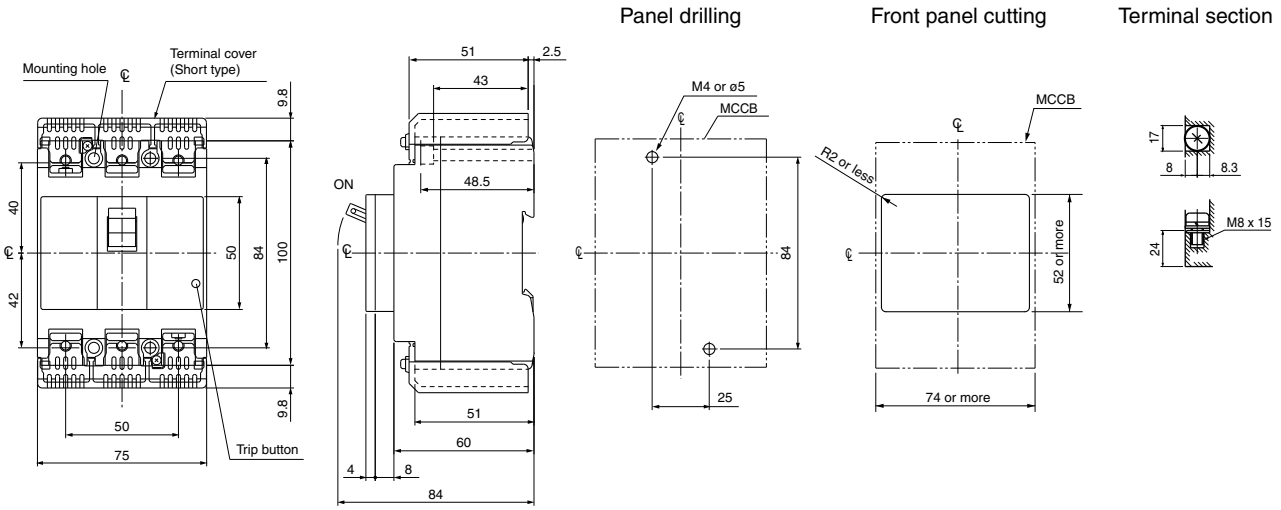

■ Dimensions, mm

● Front mounting, front connection

BW125□U-2P, 3P

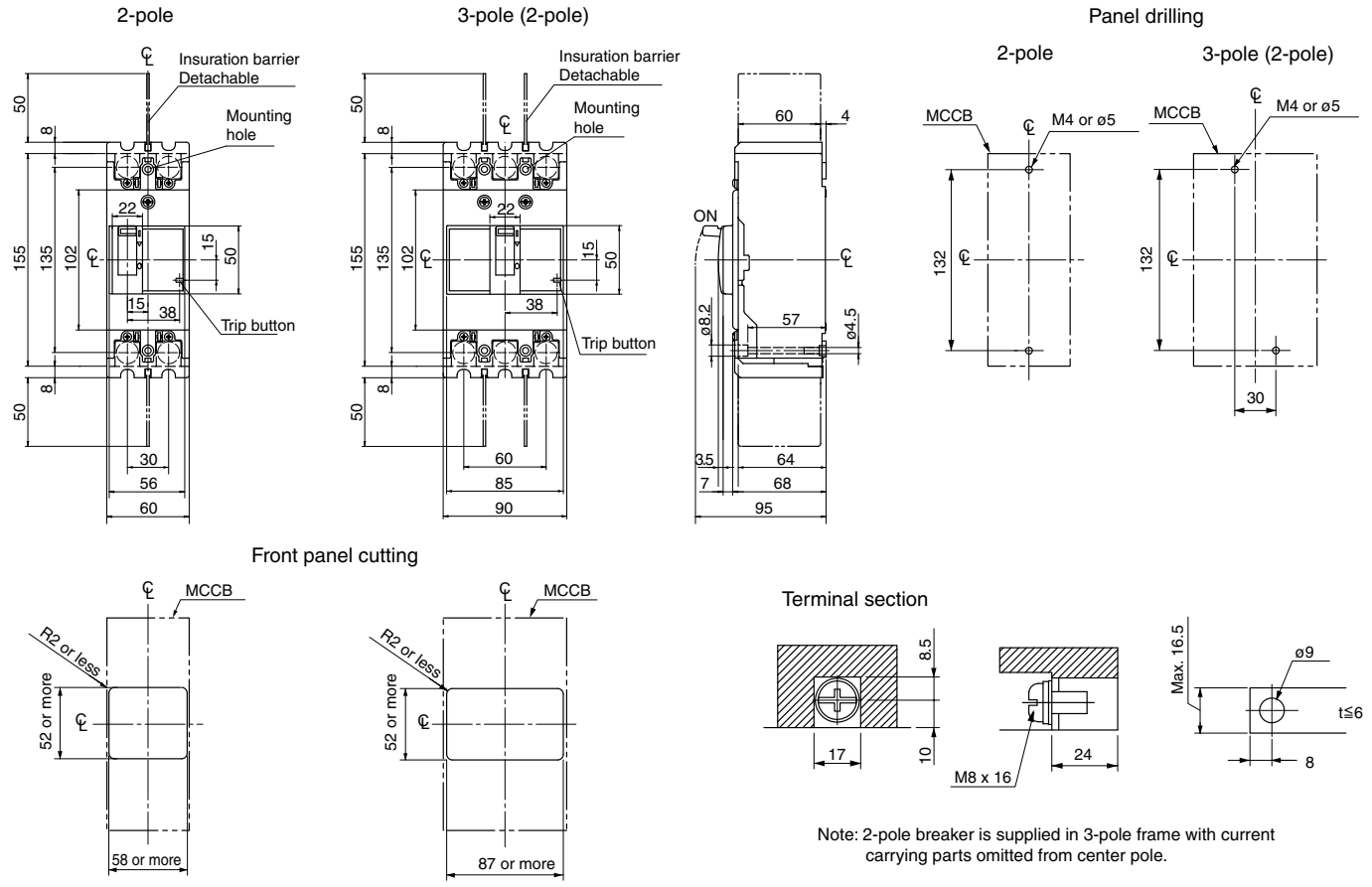

Note: 2-pole breaker is supplied in 3-pole frame with current carrying parts omitted from center pole.

BW250□U-2P, 3P

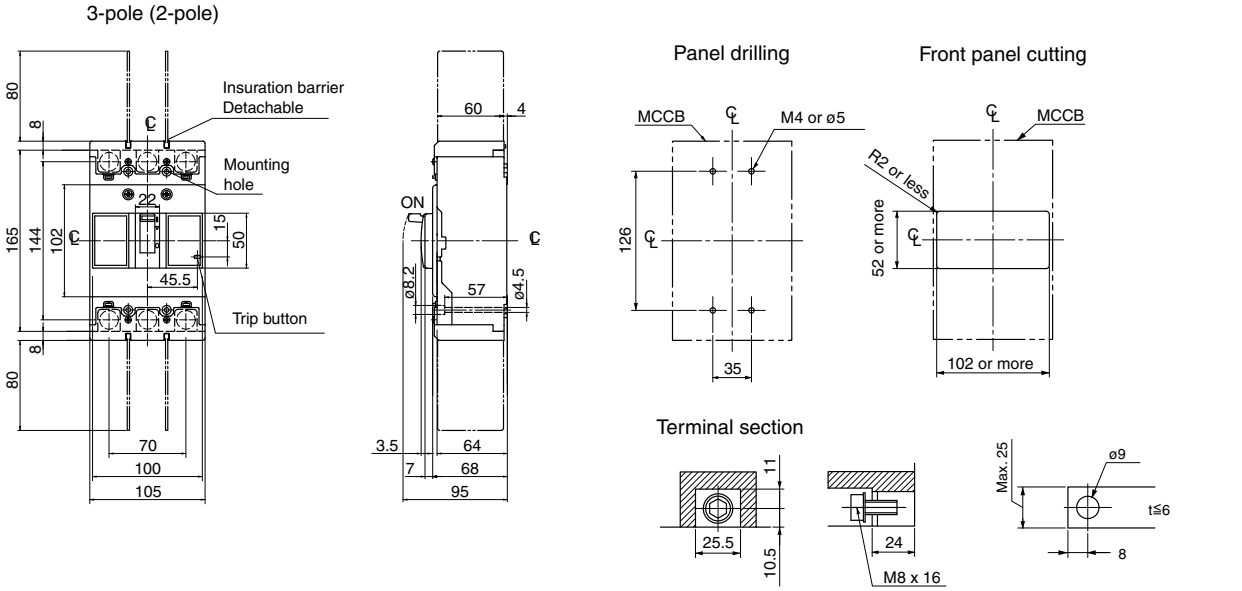

Note: 2-pole breaker is supplied in 3-pole frame with current carrying parts omitted from center pole.

■ **Dimensions, mm**

● **Front mounting, front connection**

BW400□U-2P, 3P

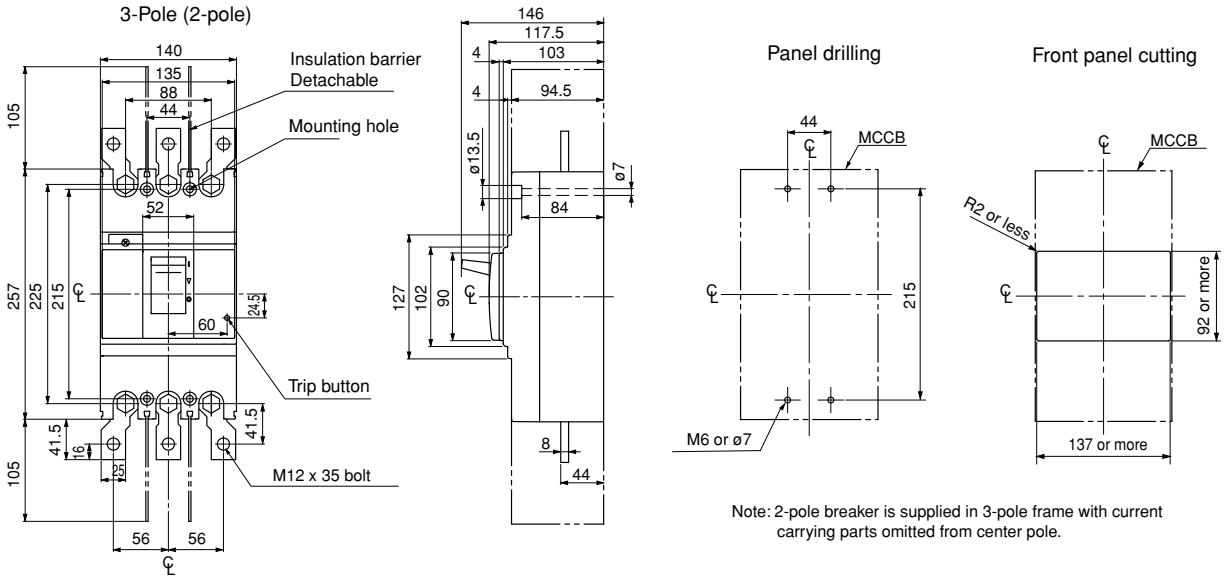

Note: 2-pole breaker is supplied in 3-pole frame with current carrying parts omitted from center pole.

BW630□U-3P

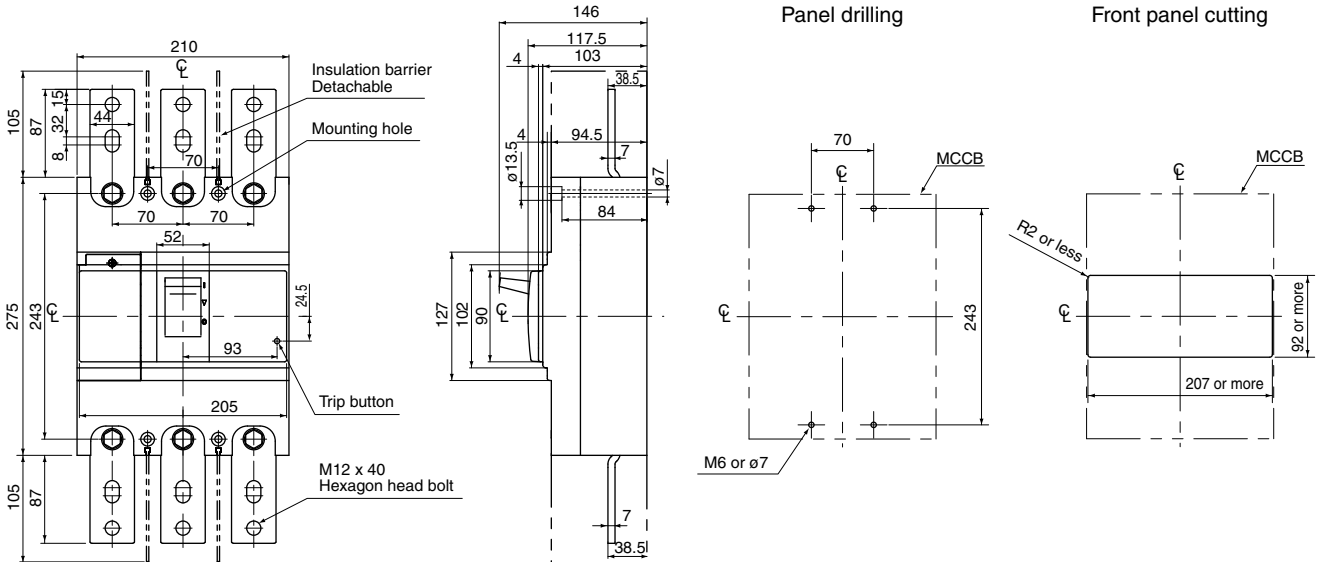

■ **Dimensions, mm**

● **Front mounting, front connection**

BW800□U-3P

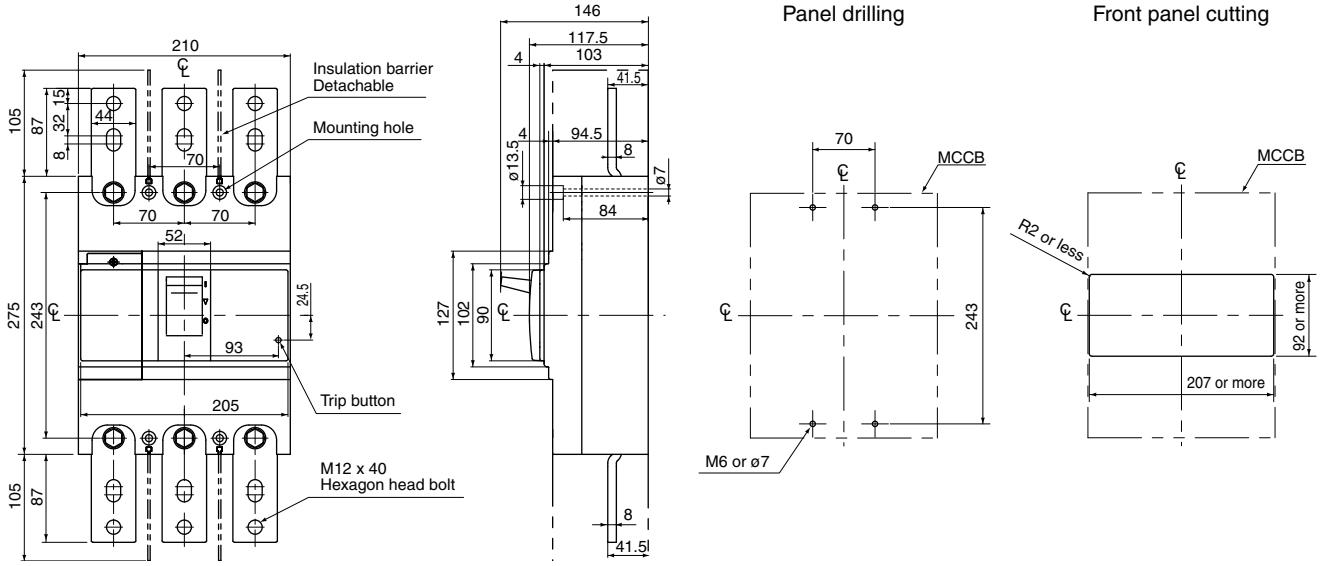

06

■ Characteristic curves / Line protection

BW32, 50, 63, 100

Rated current: 5, 10, 32, 40, 60, 63, 70, 75, 80, 90A

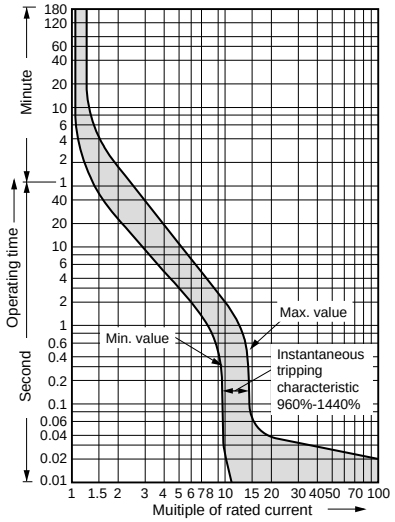

Rated current: 3, 15, 20, 30, 50,100A

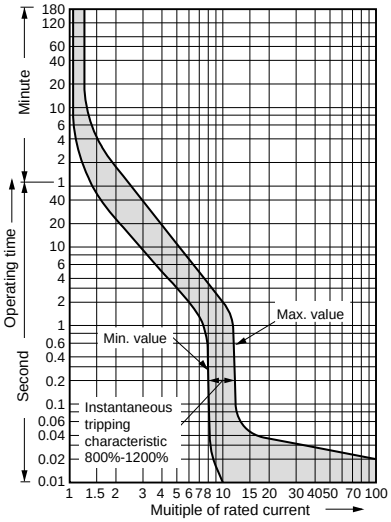

Temperature correction curve

Reference temp. 40℃

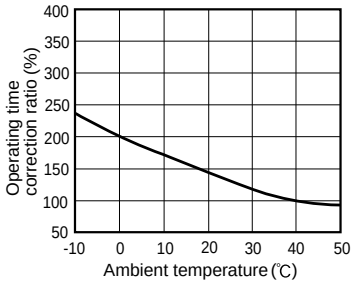

BW50HAG, BW125

• 15A

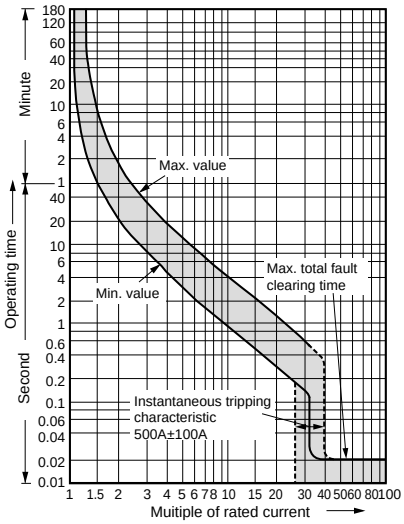

• 20A

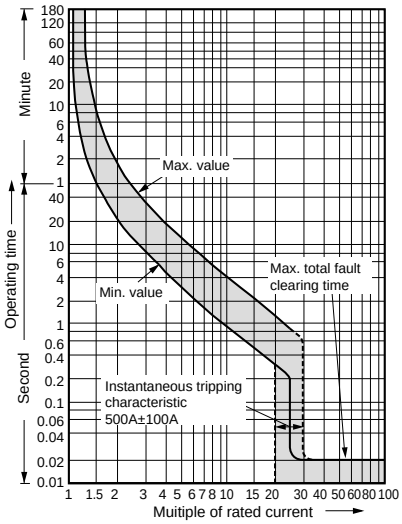

• 30A

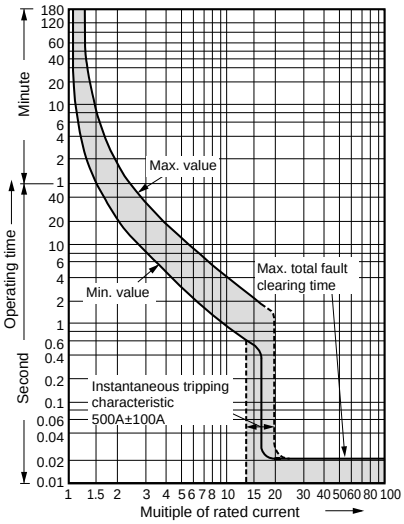

Temperature correction curve

• 15-30A

Reference temp. 40°C

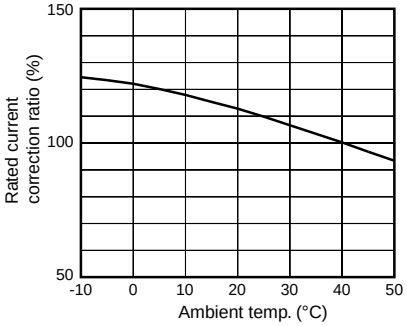

■ Characteristic curves / Line protection

BW50HAG, BW125

• **40A**

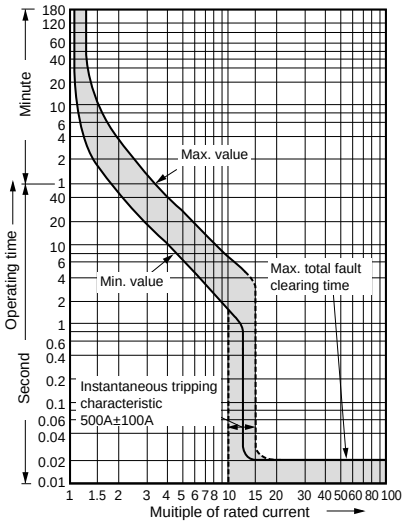

• **50-125A**

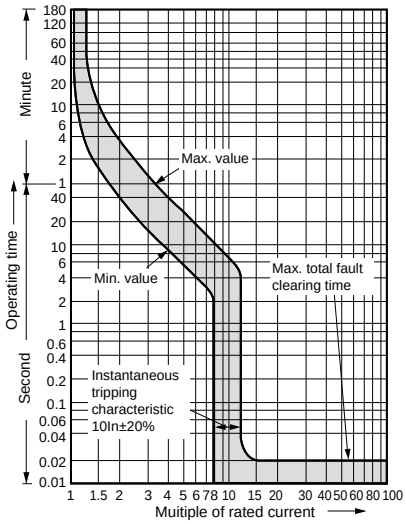

Temperature correction curve

• **40-125A**

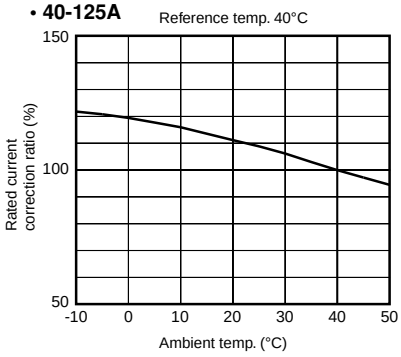

BW160, 250

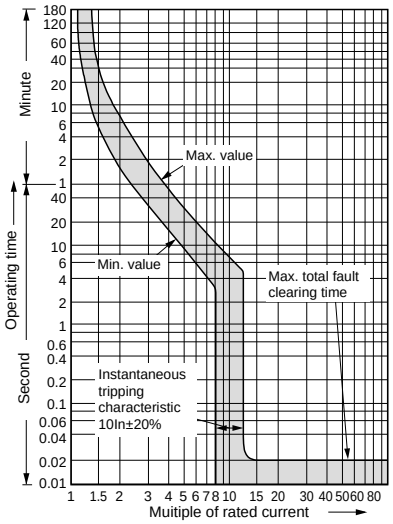

Temperature correction curve

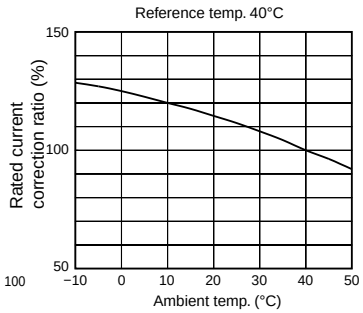

BW400

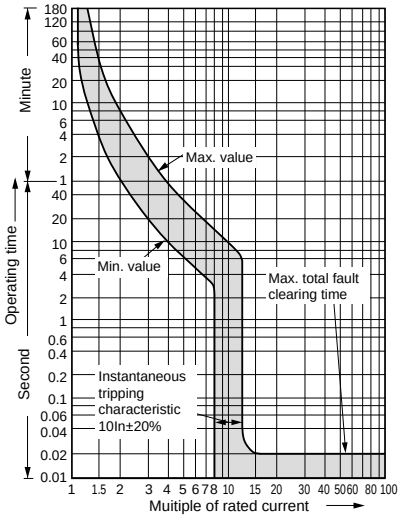

Temperature correction curve

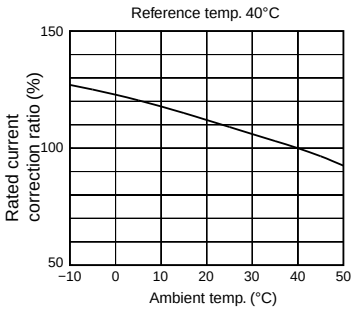

■ Characteristic curves / Line protection

BW630

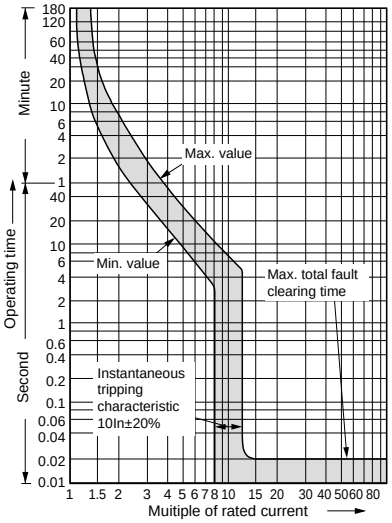

Temperature correction curve

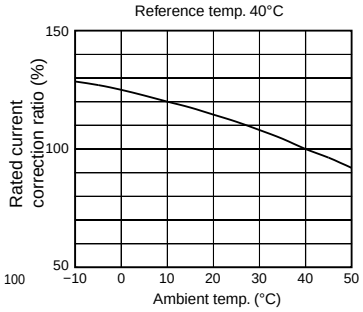

BW800

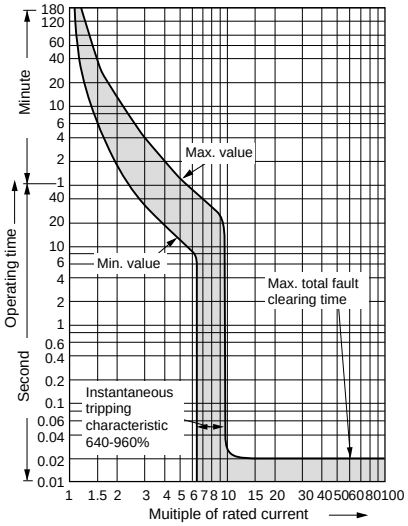

Temperature correction curve

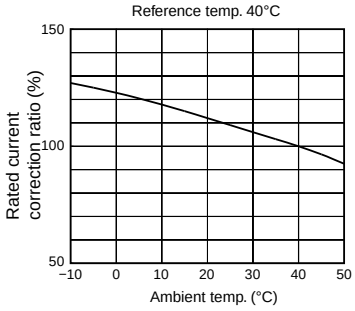

■ Characteristic curves / Motor protection

BW32, 50, 63, 100

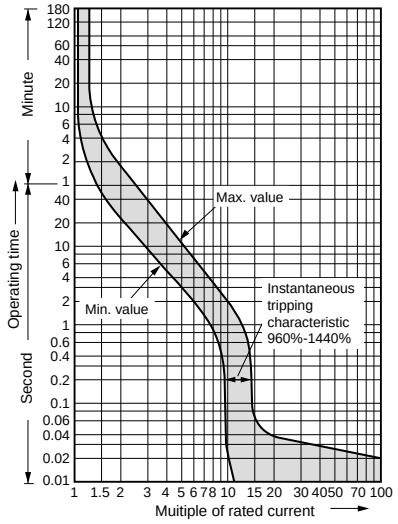

Temperature correction curve

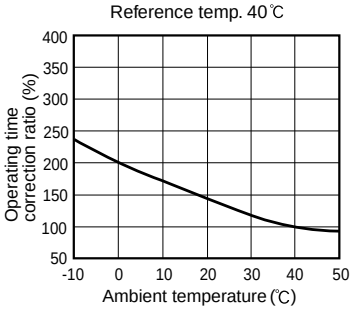

BW125

• 16A

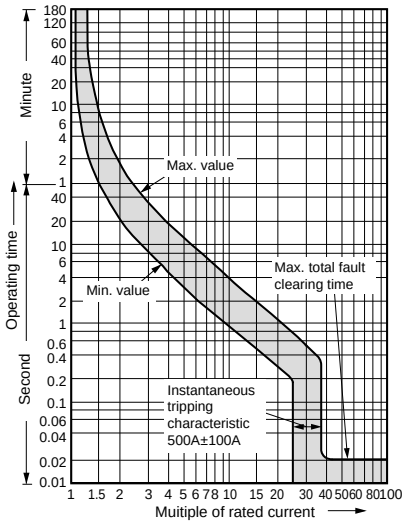

• 24A

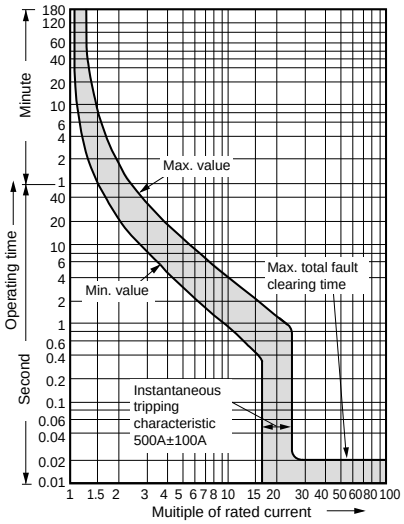

• 32A

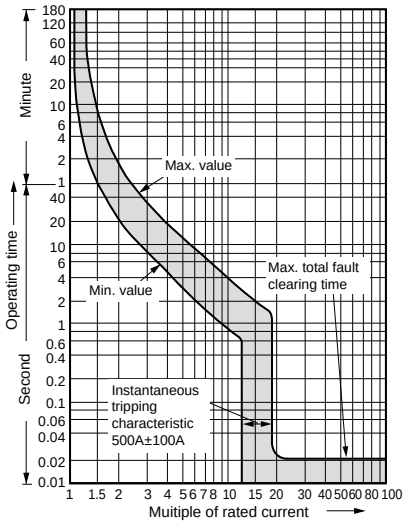

• 40-90A

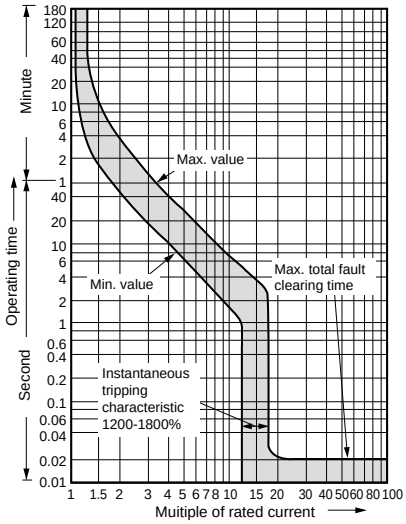

Temperature correction curve

• 15-32A

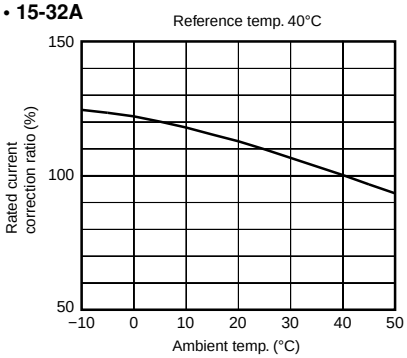

• 40-125A

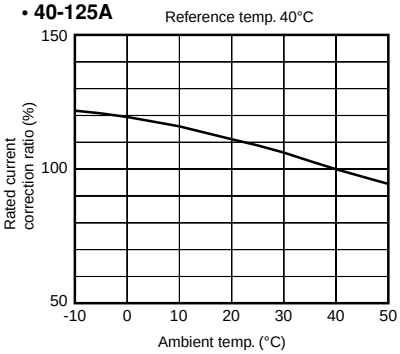

■ Characteristic curves / Motor protection

BW250

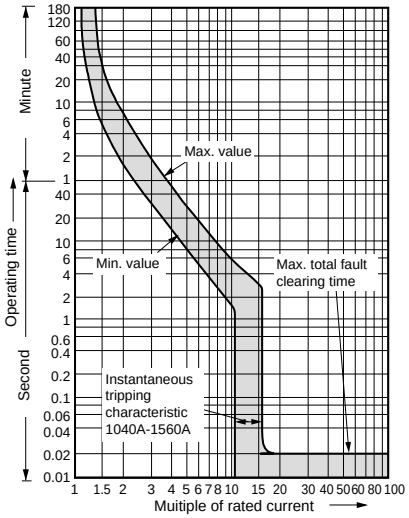

Temperature correction curve

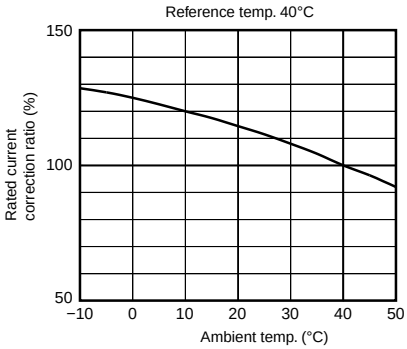

■ **Variation of internal accessory**

• **32 to100AF**

Auxiliary switch (Type W)

This switch is used for indicator lamp or control circuit.
See page 06/69.

Alarm switch (Type K)

This switch can be connected to a warning lamp or buzzer to indicate when the breaker has been tripped.
See page 06/69.

Shunt trip device (Type F)

The purpose of this accessory is to trip the breaker from a distance.
See page 06/70.

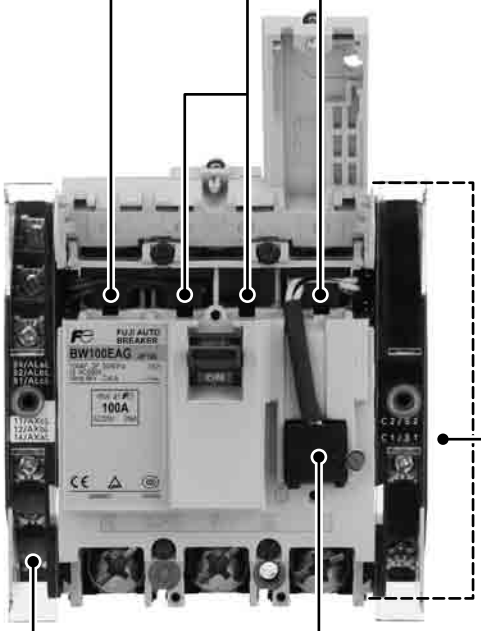

Undervoltage trip device (Type R)

The device is designed to protect circuits from harmful voltage drops.
It can also be used for remote control purposes. The trip operates when the voltage drops to less than 70% of nominal coil rating, and the breaker cannot be reset until the voltage recovers 85% of its normal rating.
See page 06/70.

Terminal block (Type A)

A wiring terminal for internal accessories (Order with W, K or F)
See page 06/71.

■ **Variation of internal accessory**

• **125 to 250AF**

Auxiliary switch (Type W)

This switch is used for indicator lamp or control circuit.
See page 06/69.

Alarm switch (Type K)

This switch can be connected to a warning lamp or buzzer to indicate when the breaker has been tripped.
See page 06/69.

Shunt trip device (Type F)

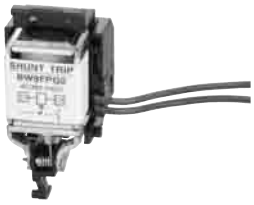

The purpose of this accessory is to trip the breaker from a distance.
See page 06/70.

Undervoltage trip device (Type R)

The device is designed to protect circuits from harmful voltage drops.
It can also be used for remote control purposes. The trip operates when the voltage drops to less than 70% of nominal coil rating, and the breaker cannot be reset until the voltage recovers 85% of its normal rating.
See page 06/70.

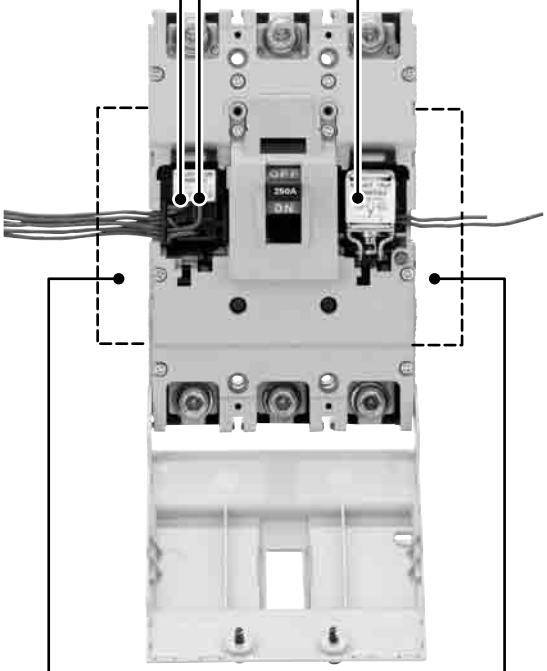

Terminal block (Type A)

A wiring terminal for internal accessories (Factory-mounted)
See page 06/71.

■ **Variation of internal accessory**

• **400 to 800AF**

Alarm switch (Type K)

This switch can be connected to a warning lamp or buzzer to indicate when the breaker has been tripped.
See page 06/69.

Shunt trip device (Type F)

The purpose of this accessory is to trip the breaker from a distance.
See page 06/70.

Terminal block (Type A)

A wiring terminal for internal accessories (Factory-mounted)
See page 06/71.

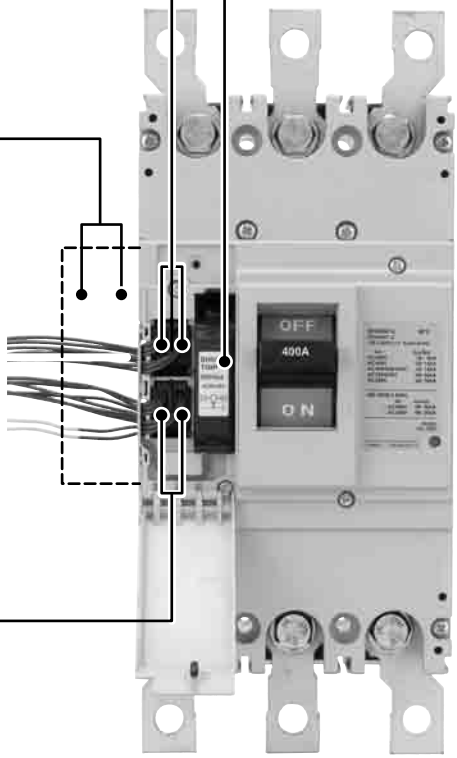

Undervoltage trip device (Type R)

The device is designed to protect circuits from harmful voltage drops.
It can also be used for remote control purposes. The trip operates when the voltage drops to less than 70% of nominal coil rating, and the breaker cannot be reset until the voltage recovers 85% of its normal rating.
See page 06/70.

Auxiliary switch (Type W)

This switch is used for indicator lamp or control circuit.
See page 06/69.

■ Variation of external accessory

External operating handles

• **N-type**
See page 06/79.

• **V-type**
See page 06/79.

• **F-type**
See page 06/79.

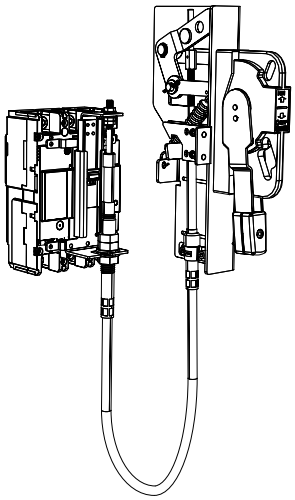

Terminal cover
Long type
See page 06/90.

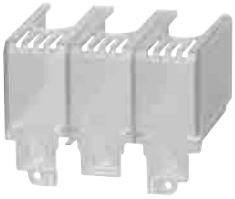

Interphase barrier
See page 06/92.

Terminal cover
Short type
See page 06/91.

Steel enclosures
See page 06/88.

Mechanical interlock device
See page 06/75.

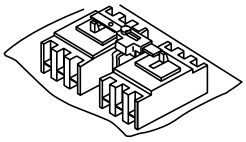

Motor-operating mechanism
See page 06/74.

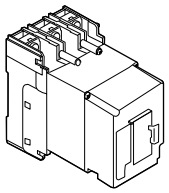

Handle locking cover (L1)
See page 06/93.

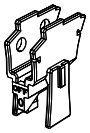

Padlocking device
See page 06/93.

• **Cap type (Q1, QN)**

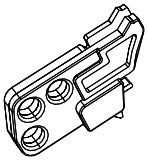

• **Plate type (Q2)**

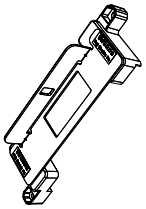

■ Terminal blocks for auxiliary circuit

- It indicates the terminal No. of internal accessory.The connection method of internal accessory is lead-wire system and terminal block system.
- For the available configuration of internal accessory, *see page 06/68.*

Lead-wire wiring

With terminal block

• Terminal number of internal accessory

Accessory		32 – 250AF		400 – 800AF
		Left side mounting	Right side mounting	Left side mounting
Auxiliary switch	SPDT: W (1)*	11 AXcL, 12 AXbL, 14 AXaL	21 AXcR, 22 AXbR, 24 AXaR	11 AXc, 12 AXb, 14 AXa
	2PDT: V (2)*	11 AXcL, 12 AXbL, 14 AXaL	21 AXcR, 22 AXbR, 24 AXaR	11 AXc, 12 AXb, 14 AXa 21 AXc, 22 AXb, 24 AXa
Alarm switch	SPDT: K (8)*	91 ALcL, 92 ALbL, 94 ALaL	01 ALcR, 02 ALbR, 04 ALaR	91 ALc, 92 ALb, 94 ALa
	2PDT: J (9)*	91 ALcL, 92 ALbL, 94 ALaL	01 ALcR, 02 ALbR, 04 ALaR	91 ALc, 92 ALb, 94 ALa 01 ALc, 02 ALb, 04 ALa
Shunt trip device : F	With 1NO contact to prevent coil burn-out	C2 S2, C1 S1		—
	Continuous rating	—		C2 S2, C1 S1
Undervoltage trip device : R		U< D2 P2, D1 P1		

Note: * ( ) Code of Low level circuit

■ Available configurations

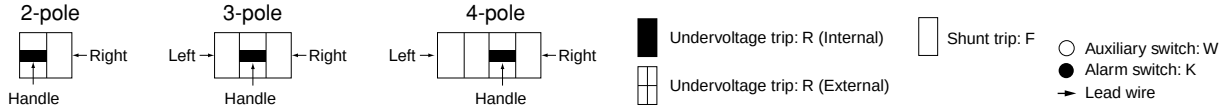

MCCB	BW32□-2P BW50□-3P BW63□-2P BW100□-2P	BW32□-3P BW50□-3P BW63□-3P BW100□-3P	BW125JAG-2P BW125JAGU-2P	BW125 BW160 BW250 (Except for BW125JAG-2P, BW125JAGU-2P)		BW400 BW630 BW800
Pole	2	3	2	2, 3	4	2, 3, 4
Auxliary switch SPDT: W (1)*						
Alarm switch SPDT: K (8)*						
Shunt trip: F						
Undervoltage trip: R	*2	*2				
W+K (1+8)						
Auxliary switch 2PDT: V (2)						
Alarm switch 2PDT: J (9)						
V+K (2+8)						
W+J (1+9)						
V+J (2+9)						
W+F (1+F)						
W+R (1+R)	*2 *1	*2				
K+F (8+F)						
K+R (8+R)	*2 *1	*2				
W+K+F (1+8+F)						
W+K+R (1+8+R)	*2 *1	*2				
V+F (2+F)						
V+R (2+R)		*2 *1				
J+F (9+F)						
J+R (9+R)		*2 *1				
V+K+F (2+8+F)						
V+K+R (2+8+R)		*2 *1				
W+J+F (1+9+F)						
W+J+R (1+9+R)		*2 *1				
V+J+F (2+9+F)					*1	
V+J+R (2+9+R)		*2 *1			*1	

Notes: •The above table is applied to front mounting type, rear mounting type, flush mounting type, and plug-in mounting type.
• Terminal block is attached on the same side of the accessory.
• ( ) Code of low level circuit □:See page 06/2.
*1 Configurations with terminal block are not available.
*2 Flush mounting, rear contection type breakers of 100AF or less are not available.

■ Operation of auxiliary switches(W) and alarm switches(K)

Accessory	Handle position		
	ON	OFF	Trip
Auxiliary switch SPDT: **W** **(1)**	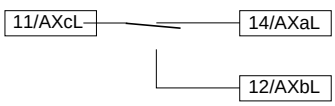	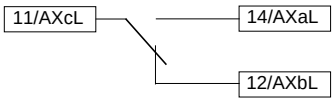	
2PDT: **V** **(2)**	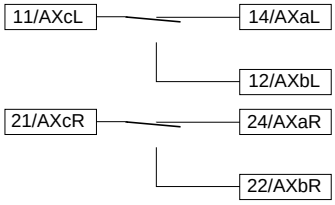	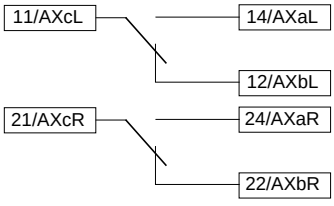	
Alarm switch SPDT: **K** **(8)**	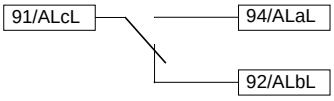		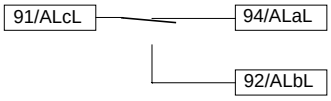
2PDT: **J** **(9)**	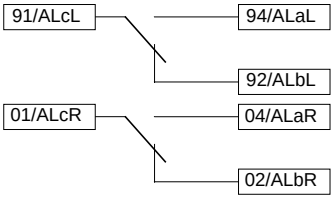		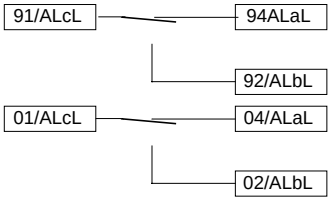

Note: ▭ Ring mark indication
( ) Code of low level circuit

■ Ratings of auxiliary switches(W) and alarm switches(K)

• 32-100AF

	IEC60947-5-1			NECA C4505		Minimum load current
	Voltage (V)	Make/break current (A)		Voltage (V)	Make/break current (A)	
		AC 15	DC 13		Res. load	
Standard type	125 AC	5	–	125 AC	5	5V DC 160mA 30V DC 30mA
	250 AC	5	–	250 AC	3	
	–	–	–	30 DC	4	
	125 DC	–	0.6	125 DC	0.4	
	250 DC	–	0.3	250 DC	0.2	
Low level circuit	–	–	–	30 DC	0.1	5V DC 1mA

• 125-800AF

	Rated thermal current (A)	Rated operational current (A)						Minimum load current
		AC			DC			
		Rated operational Voltage (V)	Res. load	Ind. load	Rated operational Voltage (V)	Res. load	Ind. load	
Standard type	5	24	5	5	24	4	3	5V DC 160mA 30V DC 30mA
		48	5	5	48	2.5	1	
		125	5	3	125	0.4	0.4	
		250	3	2	250	0.2	0.2	
Low level circuit	0.1	30	0.1	–	30	0.1	–	5V DC 1mA

06

■ Rating of shunt trip (F)

MCCB type	AC		DC		Code	Time rating of coil	Opearting time (ms)
	V	VA	V	W			
BW32 **BW50** **BW63** **BW100**	100-120	150	100-110	150	FAC100-120V/ DC100-110V	Continuous (With 1NO contact to prevent coil burn-out)	7-13
	200-240	150	–	–	FAC200-240V		
	380-450	200	–	–	FAC380-450V		
	24	150	24	150	FAC/DC24V		
BW125 **BW160** **BW250**	24	50	24	50	FAC/DC24V		13-21
	48	50	48	50	FAC/DC48V		
	100-120	50	100-110	50	FAC100-120V/ DC100-110V		
	120-130	50	–	–	FAC120-130V		
	200-240	50	200-220	50	FAC200-240V/ DC200-220V		
	277	50	–	–	FAC277V		
	380-440	50	–	–	FAC380-440V		
	440-480	50	–	–	FAC440-480V		
	500-550	50	–	–	FAC500-550V		
BW400 **BW630** **BW800**	24-48	2	24-48	2	FAC/DC24-48V	Continuous	8-20
	100-240	3	100-220	3	FAC100-240V DC100-220V		
	277	3		–	FAC277V		
	380-550	4		–	FAC380-550V		

Note: The operating tripping voltage range for shunt trip devices is 70% to 110% of the rated operating voltage.

■ Rating of undervoltage trip (R)

MCCB type	Installation	AC		DC		Code
		V	VA	V	W	
BW32 *2 **BW50** *2 **BW63** *2 **BW100** *2	External	100 (50Hz)/ 100-110(60Hz)	2.8	–	–	RAC100(50Hz)/ 100-110V(60Hz)
		200 (50Hz)/ 200-220 (60Hz)	3.4	–	–	RAC200(50Hz)/ 200-220V(60Hz)
		400 (50Hz)/ 400-440 (60Hz)	4.4	–	–	RAC400(50Hz)/ 400-440V(60Hz)
		–	–	24	40	RDC24V
				100-110		RDC100-110V
BW125 *1 **BW160** *1 **BW250** *1	Internal	–	–	24	5	RDC24V
		–	–	48	5	RDC48V
		–	–	100-110	5	RDC100-110V
		–	–	125	5	RDC125V
		100-110	5	–	–	RAC100-110V
		110-130	5	–	–	RAC110V-130V
		200-240	5	–	–	RAC200-240V
		277	5	–	–	RAC277V
		380-415	5	–	–	RAC380-415V
		440-480	5	–	–	RAC440V-480V
BW400 *2 **BW630** *2 **BW800** *2	Internal	24	2	24	2	RAC/DC24V
		48	2	48	2	RAC/DC48V
		100-110	3	100-110	3	RAC/DC100-110V
		120-130	3	125	3	RAC120-130V/DC125V
		200-240	3	200-220	3	RAC200-240V/DC200-220V
		277	3	–	–	RAC277V
		380-480	4	–	–	RAC380-480V

Notes: • The operating voltages of undervoltage tripping devices are as follows:
Tripping voltage: 35% to 70% of rated voltage, closing voltage: 85% to 110% of rated voltage.

*1 Reset-allowed type: When the breaker handle is in the OFF or RESET state, tripping does not occur even if the R coil is not energized.
Turning ON with the R coil not energized causes normal tripping.

*2 Reset-prohibited type: When the R coil is not energized, reset operation cannot reset the tripped breaker to the OFF state.

■ Lead wire specification

AF	Pole	wire size	Wire length
32 to 100AF	–	0.4mm^2 (AWG22)	Ca 500mm
125 to 250AF	2P, 3P	0.5mm^2 (AWG20)	
	4P		
400 to 800AF	2P, 3P	0.5mm^2	Ca 500mm
	4P		Ca 400 to 450mm

■ Terminal blocks

32AF, 50AF, 63AF, 100AF

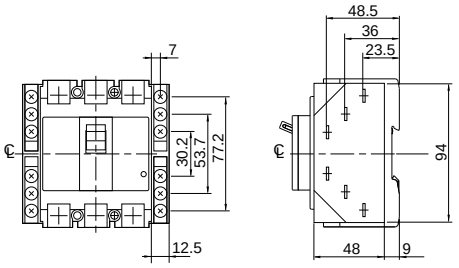

125AF, 160AF, 250AF

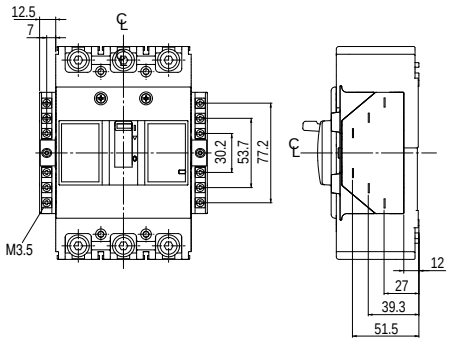

400AF, 630AF, 800AF

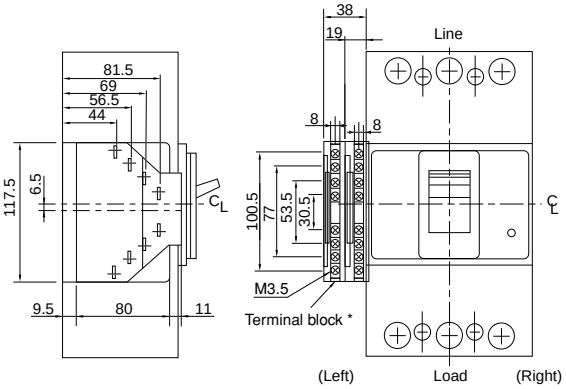

Notes:
* If the chosen combination has more than 8 terminals, 2 terminal blocks are mounted.
• Mount the terminal block on the surface on which the accessories are mounted.
See the table of the combinations of internal accessories on pages 06/68.
for information on the accessory mounting position.
• Available wire: Solid wire: 1.6ø Stranded wire: 2mm^2
• Terminal blocks are available as factory mounted only.

■ Undervoltage trip device

32AF, 50AF, 63AF, 100AF

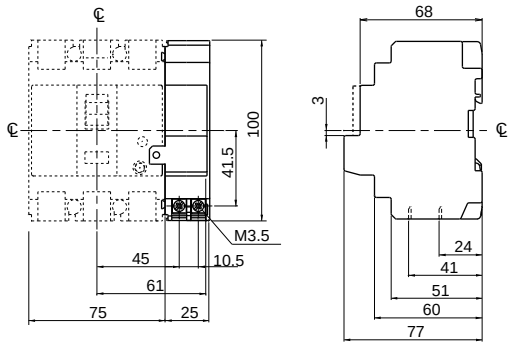

Mass: 0.15kg

06

■ Type number

Internal accessories (Sold separately)

• 32, 50, 63, 100AF IEC/EN/GB/JIS conformed

Accessory	Type				Operating voltge
	Lead wire system		Terminal block system		
	Left side	Right side	Left side	Right side	
Auxiliary switch	**BZ6WL10C**	**BZ6WR10C**	**BZ6WL10CA**	**BZ6WR10CA**	
Auxiliary switch (low level circuit)	**BZ6WDL10C**	**BZ6WDR10C**	**BZ6WDL10CA**	**BZ6WDR10CA**	
Alarm switch	**BZ6KL10C**	**BZ6KR10C**	**BZ6KL10CA**	**BZ6KR10CA**	
Alarm switch (low level circuit)	**BZ6KDL10C**	**BZ6KDR10C**	**BZ6KDL10CA**	**BZ6KDR10CA**	
Auxiliary switch + Alarm switch	**BZ6WKL10C**	**BZ6WKR10C**	**BZ6WKL10CA**	**BZ6WKR10CA**	
Auxiliary switch + Alarm switch (low level circuit)	**BZ6WDKDL10C**	**BZ6WDKDR10C**	**BZ6WDKDL10CA**	**BZ6WDKDR10CA**	
Shunt trip device	–	**BZ6FA10C**	–	**BZ6FA10CA**	100-120V AC/100-110V DC
	–	**BZ6FK10C**	–	**BZ6FK10CA**	200-240V AC
	–	**BZ6FP10C**	–	**BZ6FP10CA**	380-450V AC
	–	**BZ6FR10C**	–	**BZ6FR10CA**	24V AC/DC
Undervoltage trip device	–	–	–	**BZ6R210C**	100V AC 50Hz/100-110V AC 60Hz
	–	–	–	**BZ6R110C**	110V AC 50Hz/110-127V AC 60Hz
	–	–	–	**BZ6RW10C**	200V AC 50Hz/200-220V AC 60Hz
	–	–	–	**BZ6R410C**	220V AC 50Hz/220-240V AC 60Hz
	–	–	–	**BZ6R510C**	230V AC 50Hz/230-240V AC 60Hz
	–	–	–	**BZ6R810C**	240V AC 50Hz
	–	–	–	**BZ6R010C**	380V AC 50Hz 380-415V AC 60Hz
	–	–	–	**BZ6R910C**	400V AC 50Hz 400-440V AC 60Hz
	–	–	–	**BZ6RF10C**	24V DC
	–	–	–	**BZ6RT10C**	100-110V DC

• 50, 100AF IEC/EN/GB/JIS/UL/CSA conformed

Accessory	Type				Operating voltge
	Lead wire system		Terminal block system		
	Left side	Right side	Left side	Right side	
Auxiliary switch	**BZ6WL10CU**	**BZ6WR10CU**	**BZ6WL10CAU**	**BZ6WR10CAU**	
Auxiliary switch (low level circuit)	**BZ6WDL10CU**	**BZ6WDR10CU**	**BZ6WDL10CAU**	**BZ6WDR10CAU**	
Alarm switch	**BZ6KL10CU**	**BZ6KR10CU**	**BZ6KL10CAU**	**BZ6KR10CAU**	
Alarm switch (low level circuit)	**BZ6KDL10CU**	**BZ6KDR10CU**	**BZ6KDL10CAU**	**BZ6KDR10CAU**	
Auxiliary switch + Alarm switch	**BZ6WKL10CU**	**BZ6WKR10CU**	**BZ6WKL10CA**	**BZ6WKR10CAU**	
Auxiliary switch + Alarm switch (low level circuit)	**BZ6WDKDL10CU**	**BZ6WDKDR10CU**	**BZ6WDKDL10CAU**	**BZ6WDKDR10CAU**	
Shunt trip device	–	**BZ6FA10CU**	–	**BZ6FA10CAU**	100-120V AC/100-110V DC
	–	**BZ6FK10CU**	–	**BZ6FK10CAU**	200-240V AC
	–	**BZ6FP10CU**	–	**BZ6FP10CAU**	380-450V AC
Undervoltage trip device	–	–	–	**BZ6R210CAU**	100V AC 50Hz/100-110V AC 60Hz
	–	–	–	**BZ6RW10CAU**	110V AC 50Hz/110-127V AC 60Hz
	–	–	–	**BZ6R910CAU**	200V AC 50Hz/200-220V AC 60Hz

• 125, 160, 250AF IEC/EN/GB/JIS/UL/CSA conformed

Accessory	Type				Operating voltge
	Lead wire system		Terminal block system		
	Left side	Right side	Left side	Right side *	
Auxiliary switch	**BW9W1SG0**	**BW9W1SG0-R**	**BW9W1SG0-A**	–	–
Auxiliary switch (low level circuit)	**BW9W1DG0**	**BW9W1DG0-R**	**– ***		
Alarm switch	**BW9K1SG0**	**BW9K1SG0-R**	**BW9K1SG0-A**		
Alarm switch (low level circuit)	**BW9K1DG0**	**BW9K1DG0-R**	**– ***		
Auxiliary switch + Alarm switch	**BW9WKSG0**	**BW9WK1SG0-R**	**BW9WKSG0-A**		
Auxiliary switch + Alarm switch (low level circuit)	**BW9WKDG0**	**BW9WK1DG0-R**	**– ***		
Shunt trip device	**BW9FRG0**	**BW9FRG0**	**BW9FRG0-A**		24V AC/DC
	BW9FSG0	**BW9FSG0**	**BW9FSG0-A**		48V AC/DC
	BW9FAG0	**BW9FAG0**	**BW9FAG0-A**		100-120V AC/100-110V DC
	BW9F1G0	**BW9F1G0**	**BW9F1G0-A**		120-130V AC
	BW9FKG0	**BW9FKG0**	**BW9FKG0-A**		200-240V AC/200-220V DC
	BW9FBG0	**BW9FBG0**	**BW9FBG0-A**		277V AC
	BW9FPG0	**BW9FPG0**	**BW9FPG0-A**		380-440V AC
	BW9FHG0	**BW9FHG0**	**BW9FHG0-A**		440-480V AC
	BW9FJG0	**BW9FJG0**	**BW9FJG0-A**		500-550V AC
Undervoltage trip devics	**BW9RGAR**	–	**BW9RGAR-A**		24V DC
	BW9RGAS		**BW9RGAS-A**		48V DC
	BW9RGAL		**BW9RGAL-A**		100-110V DC
	BW9RGA5		**BW9RGA5-A**		125V DC
	BW9RGAA		**BW9RGAA-A**		100-110V AC
	BW9RGAT		**BW9RGAT-A**		110-130V AC
	BW9RGAK		**BW9RGAK-A**		200-240V AC
	BW9RGAB		**BW9RGAB-A**		277V AC
	BW9RGAP		**BW9RGAP-A**		380-415V AC
	BW9RGAH		**BW9RGAH-A**		440-480V AC

Note: * Factory-mounted

• 400, 630, 800AF IEC/EN/GB/JIS/UL/CSA conformed

Accessory	Type		Operating voltge
	Lead wire system	Terminal block system *	
	Left side		
Auxiliary switch x 1	**BW9W1SHA**	–	–
Auxiliary switch x 2	**BW9W2SHA**		
Auxiliary switch (low level circuit) x 1	**BW9W1DHA**		
Auxiliary switch (low level circuit) x 2	**BW9W2DHA**		
Alarm switch x 1	**BW9K1SHA**		
Alarm switch x 2	**BW9K2SHA**		
Alarm switch (low level circuit) x 1	**BW9K1DHA**		
Alarm switch (low level circuit) x 2	**BW9K2DHA**		
Shunt trip device	**BW9FHA-R**		24-48V AC/DC
	BW9FHA-A		100-240V AC/100-220V DC
	BW9FHA-B		277V AC
	BW9FHA-P		380-550V AC
Undervoltage trip devics	**BW9RHA-R**		24V AC/DC
	BW9RHA-S		48V AC/DC
	BW9RHA-A		100-110 AC/DC
	BW9RHA-1		120-130V AC/125V DC
	BW9RHA-K		200-240V AC/200-220V DC
	BW9RHA-B		277V AC
	BW9RHA-P		380-480V AC

Note: * Factory-mounted

Motor-operated breakers

■ Description

The breaker is fitted with a motor operating mechanism which enables ON, OFF and RESET operations to be carried out electronically by remote control.

The breakers do not conform to IEC and EN standard.

■ Type and ratings

MCCB type	Motor rating			Power source capacity	Mass (kg)
	Operating voltage	Operating time	Time rating		
BW32□-3P□M, BW50□-3P□M, BW63□-3P□M, BW100□-3P□M	100V DC 100/110V AC 200/220V AC	0.1s	15s per on-off operation	500VA	1.2
					1.3

■ Ordering information

Specify the following:
1. Type number
2. Motor operating voltage

■ Dimensions, mm / Front mounting, front connection

BW32□-3P, BW50□-3P, BW63□-3P, BW100□-3P,

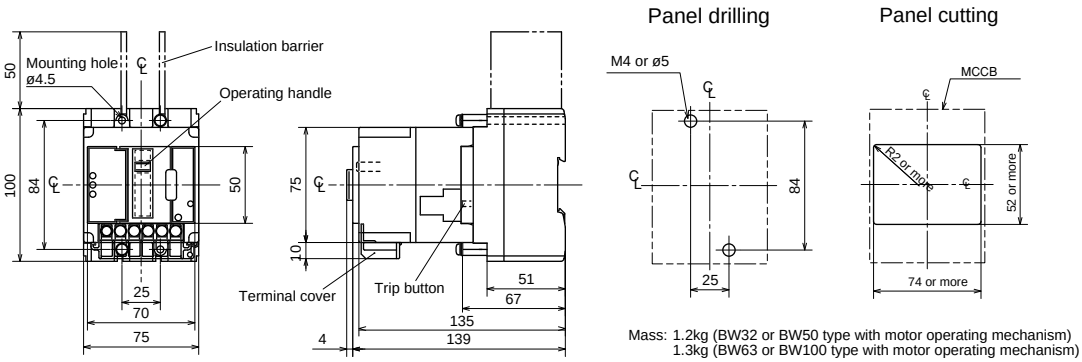

Mass: 1.2kg (BW32 or BW50 type with motor operating mechanism)
1.3kg (BW63 or BW100 type with motor operating mechanism)

Notes: • Trip button operation can be carried out at right side of the breaker.
• IEC 35mm wide mounting rail is not available.

■ Wiring diagrams

100/110V AC, 200/220V AC, 100V DC

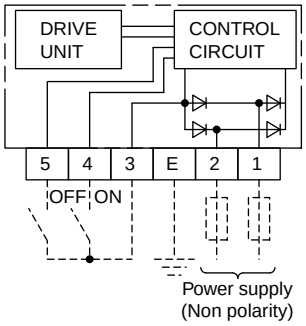

Mechanical interlocking devices

■ Description

These interlocking devices are mounted on the two separate breakers to prevent them from both being closed at the same time.
A sliding mechanism that can be locked with a padlock is used. (The padlock is not included.)
They are designed for use when changing over power supplies.
These can be mounted to 3 types of breakers: front-mounting front-connection type, front-mounting rear-connection type (type X), and plug-in mounting type (type P).
Interlock devices for flush mounting type breakers (type E, Y) are also available.

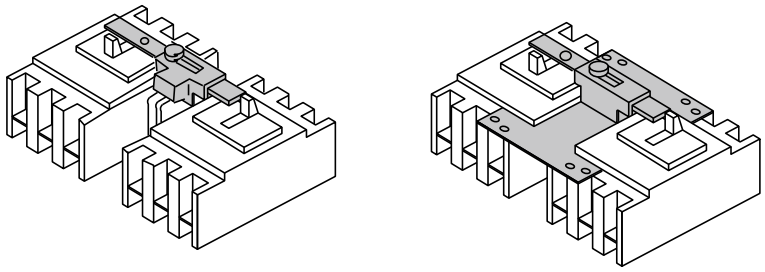

M1 types

■ Type and applicable breakers

Type	Breaker type
BZ6M110C2	BW32AAG-2P, BW32SAG-2P BW50AAG-2P, BW50EAG-2P, BW50SAG-2P, BW50RAG-2P BW63EAG-2P, BW63SAG-2P, BW63RAG-2P BW100EAG-2P
BZ6M110C3	BW32AAG-3P, BW32SAG-3P BW50AAG-3P, BW50EAG-3P, BW50SAG-3P, BW50RAG-3P BW63EAG-3P, BW63SAG-3P, BW63RAG-3P BW100AAG-3P, BW100EAG-3P
BW9M1CA-2	BW125JAG-2P
BW9M1CA-3	BW125JAG-3P, BW125SAG-2P, BW125SAG-3P, BW125RAG-2P, BW125RAG-3P
BW9M1CA-4	BW125JAG-4P, BW125SAG-4P, BW125RAG-4P
BW9M1GA-3	BW160EAG-2P, BW160EAG-3P, BW160JAG-2P, BW160JAG-3P BW160SAG-2P, BW160SAG-3P, BW160RAG-2P, BW160RAG-3P BW250EAG-2P, BW250EAG-3P, BW250JAG-2P, BW250JAG-3P BW250SAG-2P, BW250SAG-3P, BW250RAG-2P, BW250RAG-3P
BW9M1GA-4	BW160JAG-4P, BW160SAG-4P, BW160RAG-4P BW250JAG-4P, BW250SAG-4P, BW250RAG-4P
BW9M1HA-3	BW400EAG-2P, BW400EAG-3P, BW400SAG-2P, BW400SAG-3P BW400RAG-2P, BW400RAG-3P, BW400HAG-2P, BW400HAG-3P
BW9M1HA-4	BW400RAG-4P, BW400HAG-4P
BW9M1JA-3	BW630EAG-3P, BW630RAG-3P, BW630HAG-3P BW800EAG-3P, BW800RAG-3P, BW800HAG-3P

■ Dimensions, mm

• 32AF to 100AF

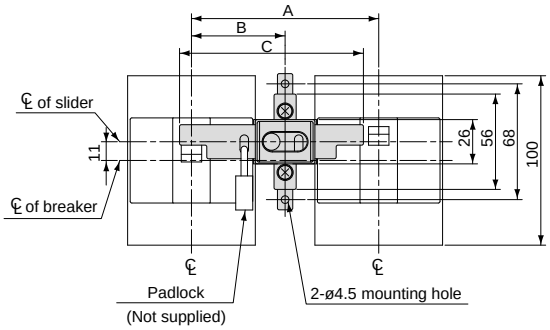

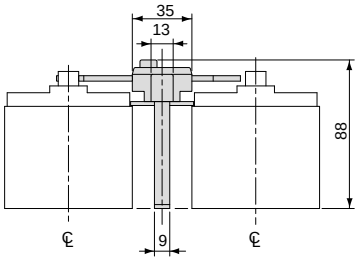

Panel drilling

BZ6M110C2

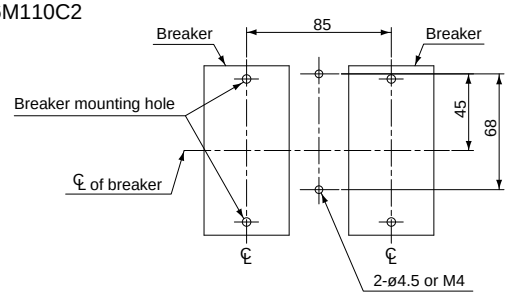

BZ6M110C3

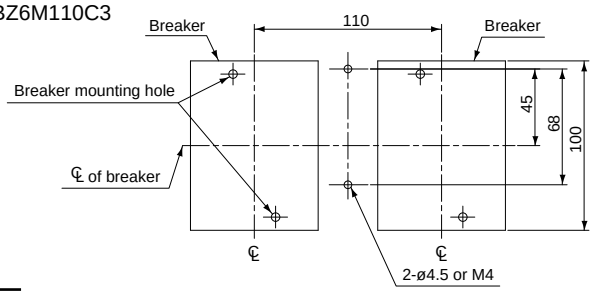

Type	Dimensions, mm A	B	C	Mass (kg)
BZ6M110C2	85	42.5	83	0.11
BZ6M110C3	110	55	108	0.12

Notes: • BZ6M110C2 is not available for padlock.
• Applicable padlock(ø3.5) dimensions, mm
• External installation forms F and R are not applicable to the MCCB on the left of the diagram.

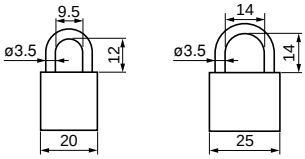

■ Dimensions, mm

• 125AF to 250AF

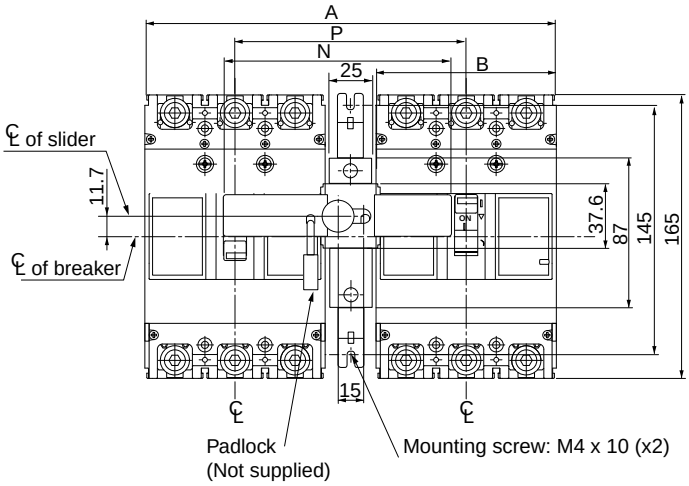

Panel drilling

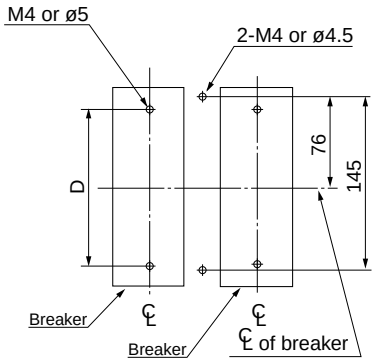

Fig.1

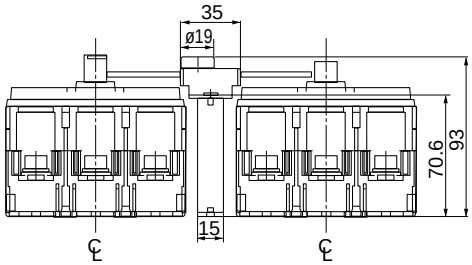

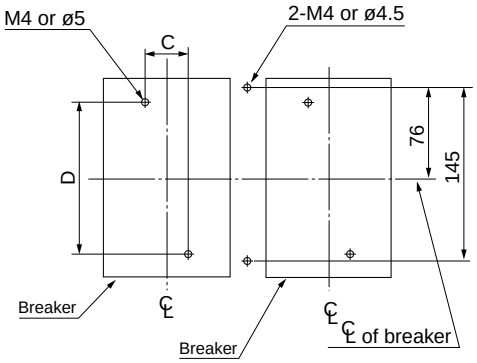

Fig.2

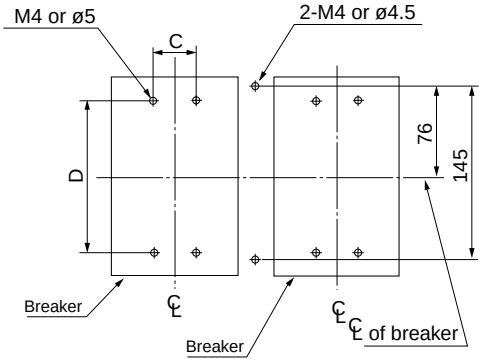

Fig.3

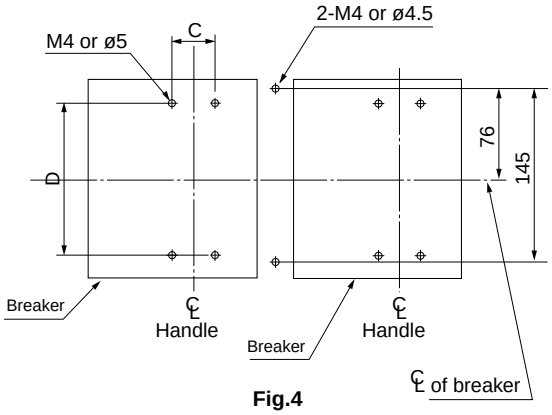

Fig.4

Type	Dimensions, mm						Panel Drilling	Mass(Kg)
	P	N	A	B	C	D		
BW9M1CA-2	90	88	150	60	–	132	Fig.1	
BW9M1CA-3	120	118	210	90	30	132	Fig.2	
BW9M1CA-4	150	148	270	102	30	132	Fig.4	
BW9M1GA-3	135	133	240	105	35	126	Fig.3	
BW9M1GA-4	170	168	310	140	35	126	Fig.4	

Notes: • The dimensions and Breaker mounting holes for back surface mounting are different from those given above. Inquire for details.
• If a padlock is required, use a commercially available padlock with the dimensions shown in the diagram at the right.
• External installation forms F and R are not applicable to the MCCB on the left of the diagram.

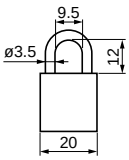

■ Dimensions, mm

• 400AF to 800AF

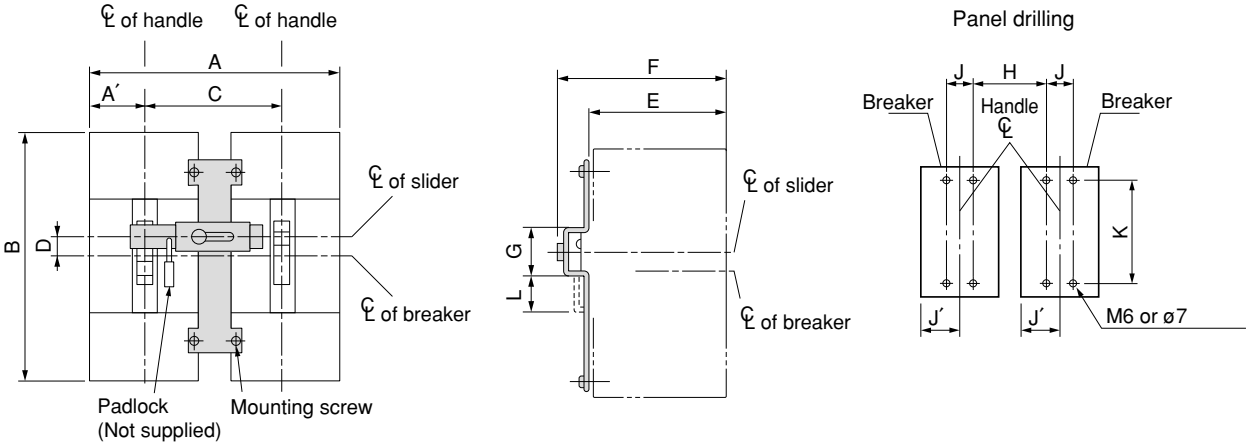

Type	Dimensions, mm											Mass(Kg)
	A (A')	B	C	D	E	F	G	H	J (J')	K	L	
BW9M1HA-3	355 (70)	257	215	20	94.5	132.5	54.5	171	44 (70)	215	38	
BW9M1HA-4	470 (140)	257	260	20	94.5	132.5	54.5	216	44 (140)	215	38	
BW9M1JA-3	500 (105)	275	290	20	94.5	132.5	54.5	220	70 (105)	243	38	

Notes: • The dimensions and Breaker mounting holes for back surface mounting are different from those given above. Inquire for details.
• If a padlock is required, use a commercially available padlock with the dimensions shown in the diagram at the right.
• External installation forms F and R are not applicable to the MCCB on the left of the diagram.

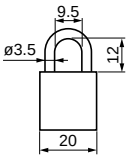

External operating handles

■ Description

Molded case circuit breaker handles are generally directly manual-operated but when mounted in motor control centers or on control panels they are sometimes required to be operated externally. To meet such applications FUJI offers the following three types of handles.

N type handle
This type has a knob handle directly attached to the breaker. It is easily fitted by cutting a hole in the panel, which is provided with a door interlock. They may be fitted to all breakers up to 800 ampere frame sizes.
Conformed to EN60947-1 isolation function.
Available for EN60204-1 power breaking device.
Conformed to UL489 (File No.E93289)

V type handle
The V type handle may be fitted to breakers of up to 800AF.
A separately sold extension shaft provides distance adjustment between the handle and breaker.
Conformed to EN60947-1 isolation function.
Available for EN60204-1 power breaking device.
Conformed to UL489 (File No.E93289)

F type handle
The F type handle may be fitted to breakers of 125 to 400AF.
It is a flange type handle, which is commonly used in the North American market.
The drive section of the breaker and the external operating handle are connected with an optional cable.
Positioning between the breaker and the external operating handle is not required.

Conformed to UL489 (File No.E93289)

BW9N0CA
N type handles

BW9V0CA
V type handle

N type handles

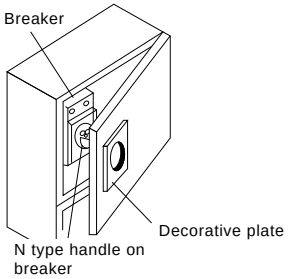

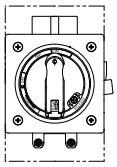

V type handles

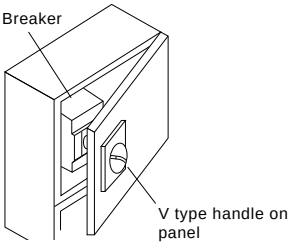

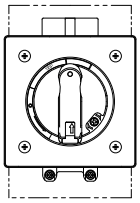

F type handles

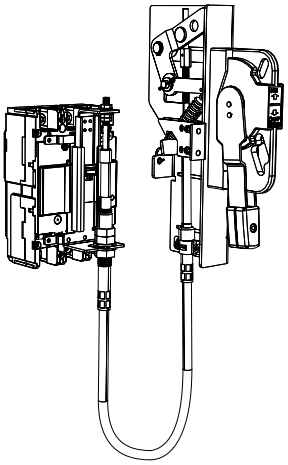

06

N type handles

MCCB	N type handle
BW32	**BZ6N10D**
BW50	
BW63	
BW100	
BW125	**BW9N0CA**
BW160 BW250	**BW9N0GA**
BW400	**BW9N0HA**
BW630 BW800	**BW9N0JA**

V type handles

MCCB	V type handle
BW32	**BZ6V10D**
BW50	
BW63	
BW100	
BW125	**BW9V0CA**
BW160 BW250	**BW9V0GA**
BW400	**BW9V0HA**
BW630 BW800	**BW9V0JA**

F type handles

MCCB	N type handle
BW125	**BW9F0CA**
BW250	**BW9F0GA**
BW400	**BW9F0HA**

■ Type number nomenclature

• N type handle

BW9N0CA – □

- **Mounting** (For BZ6N10D, BW9N0HA, BW9N0JA)
  - Blank: Front mounting, front connection
  - X: Front mounting, rear connection
  - P: Plug-in mounting
- **Basic type**

• V type handle

BW9V0CA – □

- **Mounting** (For BZ6V10D, BW9V0HA, BW9V0JA)
  - Blank: Front mounting, front connection
  - X: Front mounting, rear connection
  - P: Plug-in mounting
- **Basic type**

Note:
To order a V handle for front-mounting rear connection breakers, add “-X” to the type number; for plug-in mounting breakers, add “-P” to the type number.

• F type handle

BW9F0 □ A

- **Breaker type**
  - C: BW125□U
  - G: BW250□U
  - H: BW400□U
- **Basic type**

Cable (For F type)

BW9FW □ A – □ A

- **Cable length**
  - 15: 1.5m
  - 20: 2.0m
  - 30: 3.0m
- **Breaker type**
  - C: BW125□U
  - G: BW250□U
  - H: BW400□U
- **Basic type**

Terminal cover (For F type)

BW9FBT □ A – L3

- **Breaker type**
  - C: BW125□U
  - G: BW250□U
  - H: BW400□U
- **Basic type**

■ Dimensions, mm

N type handle

• BZ6N10D

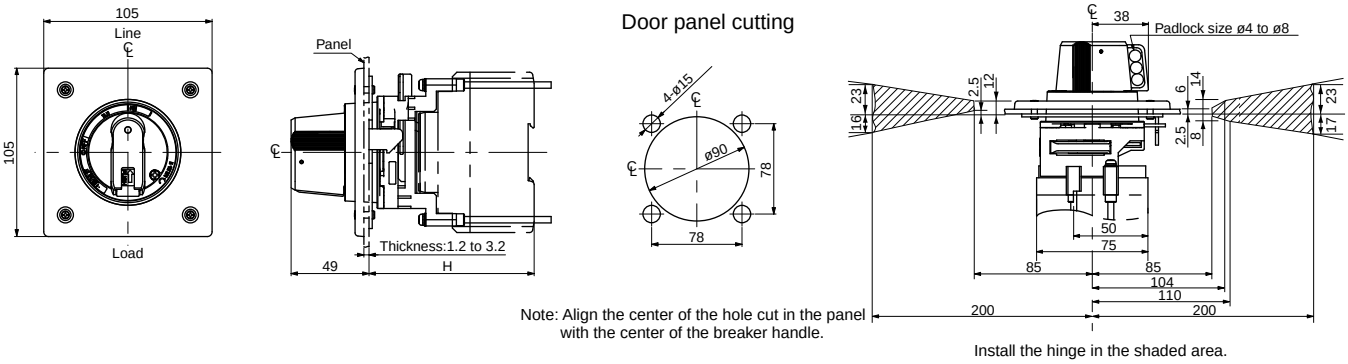

Note: Align the center of the hole cut in the panel with the center of the breaker handle.

Install the hinge in the shaded area.

MCCB	Handle type	Dust proof packing	Mounting screw	H (mm)	Mass (kg)
BW32	**BZ6N10D**	Provided	M4 x 85	103	0.47
BW50	**BZ6N10D-X**	Provided	Contact FUJI.	111	
BW63	**BZ6N10D-P**			111	
BW100					

• BW9N0CA, BW9N0GA

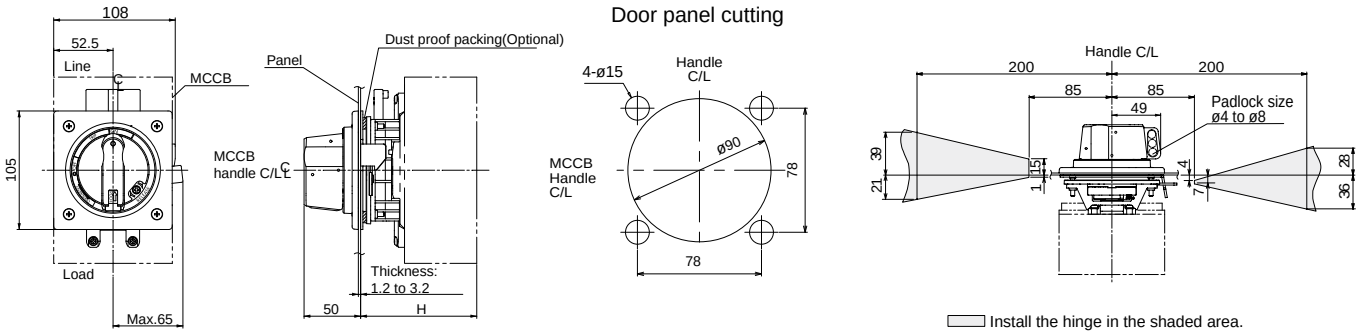

Install the hinge in the shaded area.

Note: Align the center of the hole cut in the panel with the center of the breaker handle.

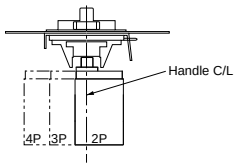

MCCB	Handle type	Dust proof packing	Mounting screw	H (mm)	Mass (kg)
BW125	**BW9N0CA*[1]**	BZ-NP-1C	M4 x 85	103±2	0.56
BW160	**BW9N0GA*[2]**	BZ-NP-1C	M4 x 85	103±2	0.56
BW250					

Notes:
- The handle lock bars do not hold the entire door. Obtain a support bracket for the panel separately.
- Remove the handle lock bar before opening the door. (Turn the handle in the open direction.) The lock bar will be damaged if the door is opened with force while the lock bar is engaged.
- Engage the door interlock securely before turning ON the power.

*[1] The Terminal Cover and Handle cannot be attached at the same time for the BW125JAG-2P or BW125RAGU-2P. Select the BW125JAG-3P or BW125RAGU-3P to use a Handle.

*[2] The terminal cover will cover the mounting screws for the Breaker. When attaching the terminal cover, a portion of the terminal cover will need to be removed. Remove portion A in the following diagram.

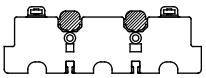

• **BW9N0HA, BW9N0JA**

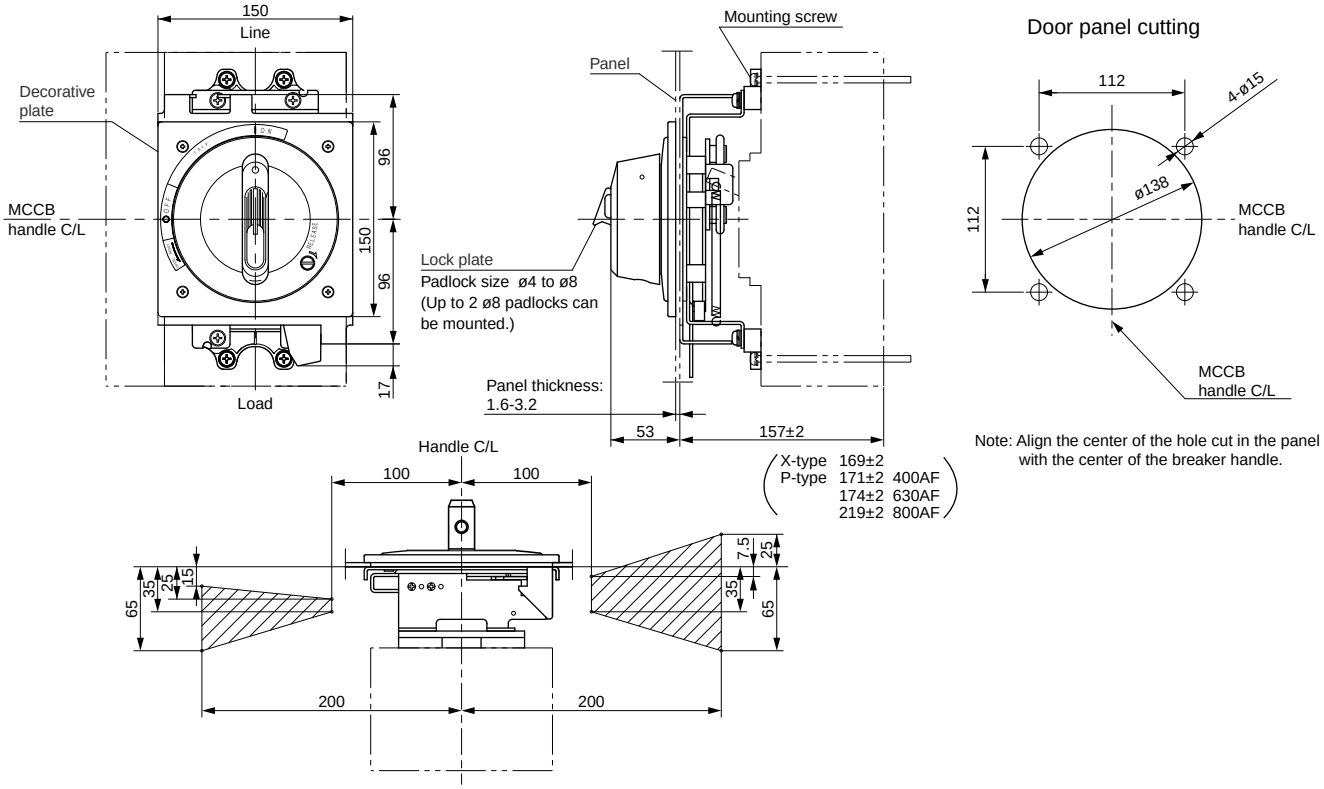

Install the door hinge in the shaded area.

MCCB	Handle type	Dust proof packing	Mounting screw	Mass (kg)
BW400	**BW9N0HA** **BW9N0HA-X** **BW9N0HA-P**	BZ-NP-2	M6 x 110 M6 x 115 Contact FUJI.	1.9
BW630 BW800	**BW9N0JA** **BW9N0JA-X** **BW9N0JA-P**	BZ-NP-2	M6 x 110 M6 x 115 Contact FUJI.	1.9

Notes:
- The handle lock bars do not hold the entire door. Obtain a support bracket for the panel separately.
- Remove the handle lock bar before opening the door. (Turn the handle in the open direction.)
  The lock bar will be damaged if the door is opened with force while the lock bar is engaged.
- Engage the door interlock securely before turning ON the power.
- Not available for side mounting.

■ Dimensions, mm

V type handle

• BZ6V10D

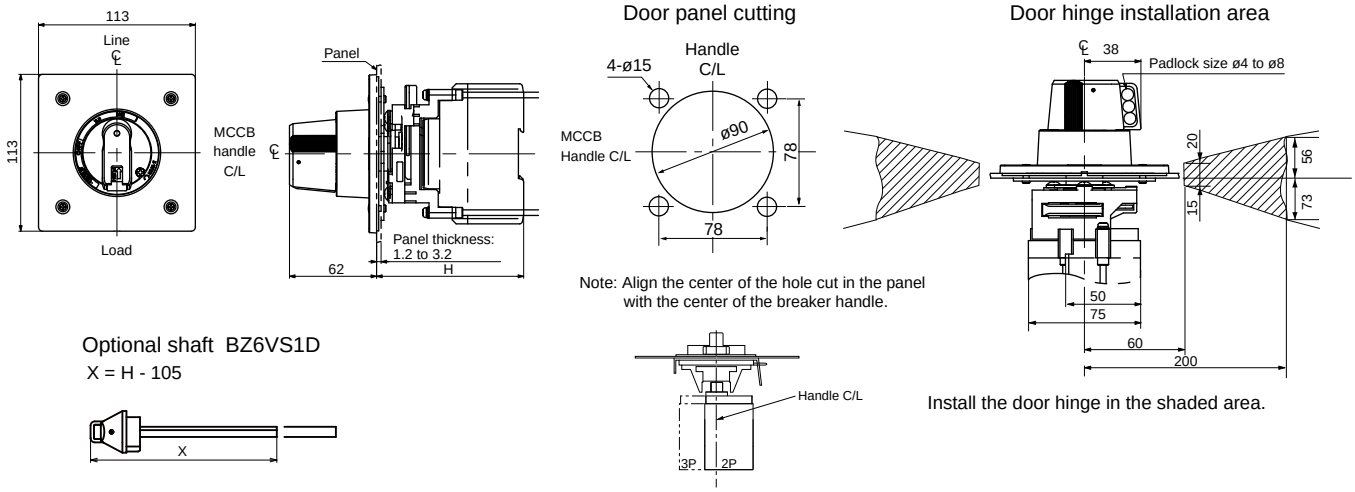

• BW9V0CA, BW9V0GA

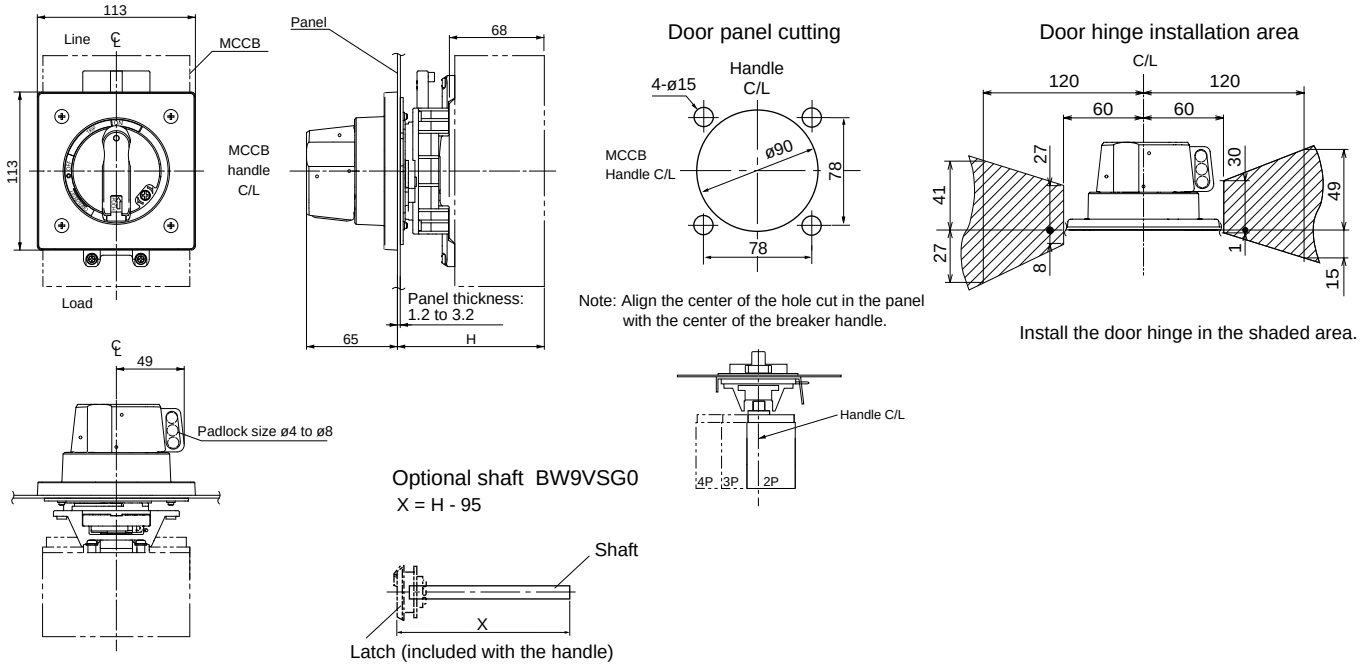

MCCB	Handle type	Optional shaft	Standard type H	With the optional shaft (X=154)		Mounting screw	Mass (kg)
				H	Area in which the hinge with H can be installed		
BW32 BW50 BW63 BW100	**BZ6V10D**	BZ6VS1D	105±2	250±2	140 to 250	M4 x 80	0.64
	BZ6V10D-X		113±2	258±2	150 to 258	Contact FUJI.	0.64
	BZ6V10D-P		113±2	258±2	150 to 258	Contact FUJI.	0.64
BW125	**BW9V0CA**	BW9VSG0	105±2	250±2	140 to 250	M4 x 85	0.67
BW160*2 BW250*2	**BW9V0GA**		105±2	250±2	140 to 250	M4 x 85	0.67

Notes: • The handle lock bars do not hold the entire door. Obtain a support bracket for the panel separately.
• Remove the handle lock bar before opening the door. (Turn the handle in the open direction.)
The lock bar will be damaged if the door is opened with force while the lock bar is engaged.
• Engage the door interlock securely before turning ON the power.
• Not available for side mounting.
*1 The Terminal Cover and Handle cannot be attached at the same time for the BW125JAG-2P or BW125RAGU-2P. Select the BW125JAG-3P or BW125RAGU-3P to use a Handle.
*2 The terminal cover will cover the mounting screws for the Breaker. When attaching the terminal cover, a portion of the terminal cover will need to be removed. Remove portion A in the following diagram.

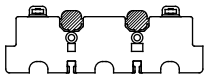

• **BW9V0HA, BW9V0JA**

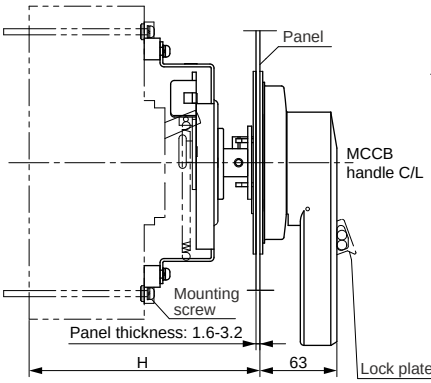

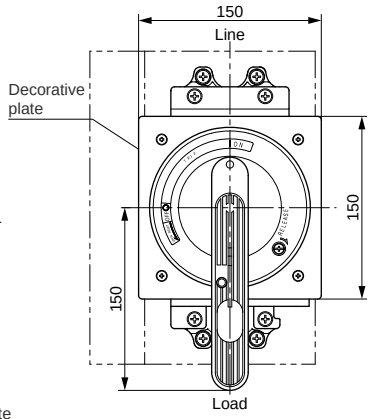

Lock plate
Padlock size ø4 to ø8
(Up to 2 ø8 padlocks can be mounted.)

Door panel cutting

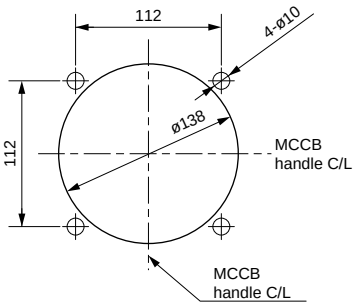

Note: Align the center of the hole cut in the panel with the center of the breaker handle.

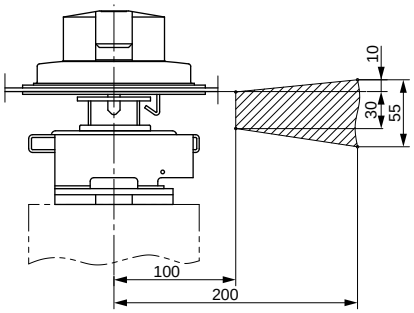

Install the door hinge in the shaded area.

Optional shaft (BZ-VS2)

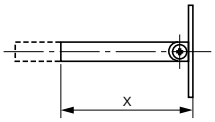

When using the BZ-VS2 extension shaft to adjust dimension H, cut it according to the equation below.
X=H−161.5

MCCB	Handle type	Optional shaft	Standard type H	With the optional shaft (X=154)		Mass (kg)
				H	Area in which the hinge with H can be installed	
BW400	**BW9V0HA**	BZ-VS2	190±2	250±2	202 to 250	2.2
	BW9V0HA-X		202±2	262±2	214 to 262	
	BW9V0HA-P		204±2	264±2	216 to 264	
BW630	**BW9V0JA**		190±2	250±2	202 to 250	
	BW9V0JA-X		202±2	262±2	214 to 262	
	BW9V0JA-P		207±2	267±2	219 to 269	
BW800	**BW9V0JA**		190±2	250±2	202 to 250	
	BW9V0JA-X		202±2	262±2	214 to 262	
	BW9V0JA-P		252±2	312±2	264 to 312	

Notes:
- The handle lock bars do not hold the entire door. Obtain a support bracket for the panel separately.
- Remove the handle lock bar before opening the door. (Turn the handle in the open direction.)
  The lock bar will be damaged if the door is opened with force while the lock bar is engaged.
- Engage the door interlock securely before turning ON the power.
- Not available for side mounting.

■ Dimensions, mm

F type handle

• BW9F0CA

Drive section

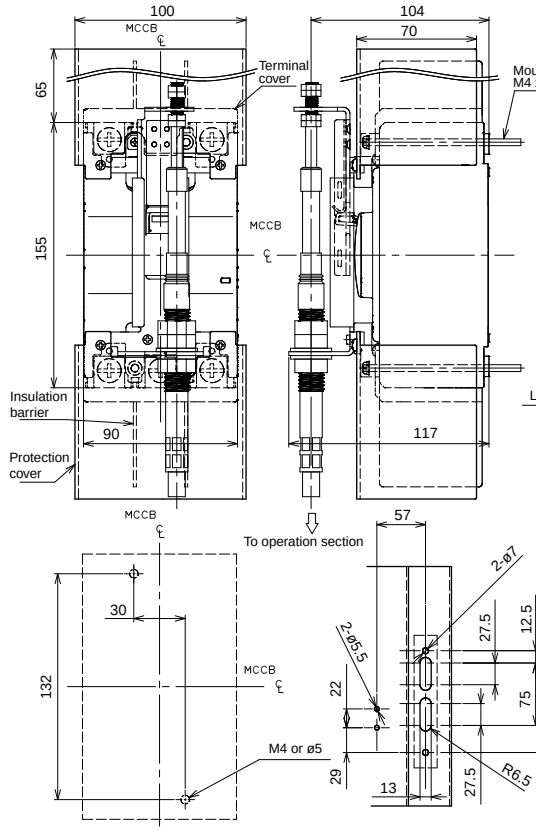

Operation section

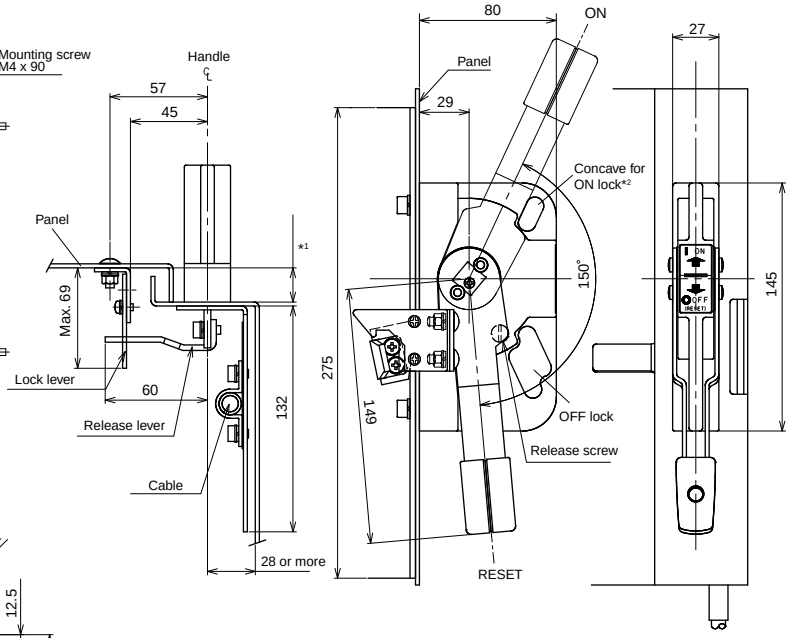

- This product consists of a drive section and an operation section.
- The operation section can be mounted either to the right or to the left on the panel depending on the mounting position of the release lever.
- For the OFF lock, 3 ø10 padlocks can be mounted; for the ON lock, 2 ø10 padlocks.

*1 Set the height to 20 or 30. Adjust the lock lever depending on the setting.
*2 The ON lock can be realized by additionally creating a concave for the ON lock.

Panel drilling

• BW9F0GA

Drive section

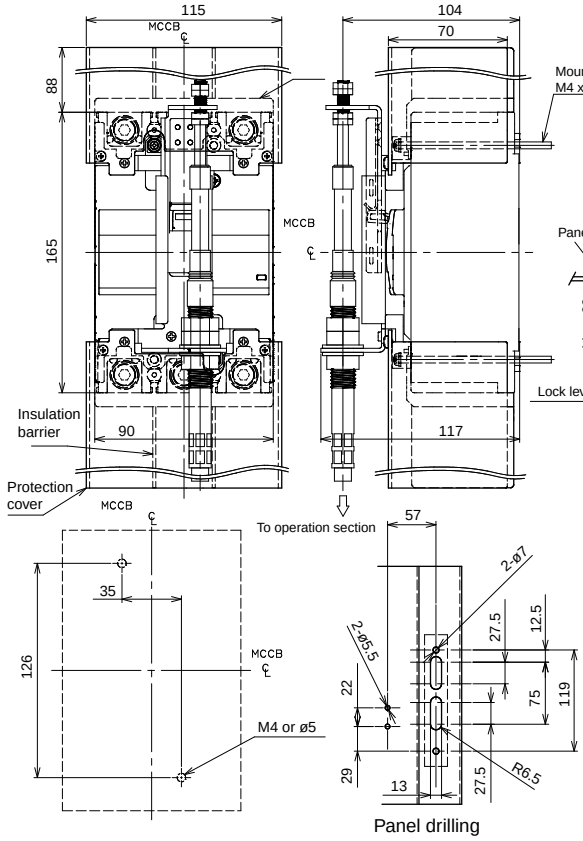

Operation section

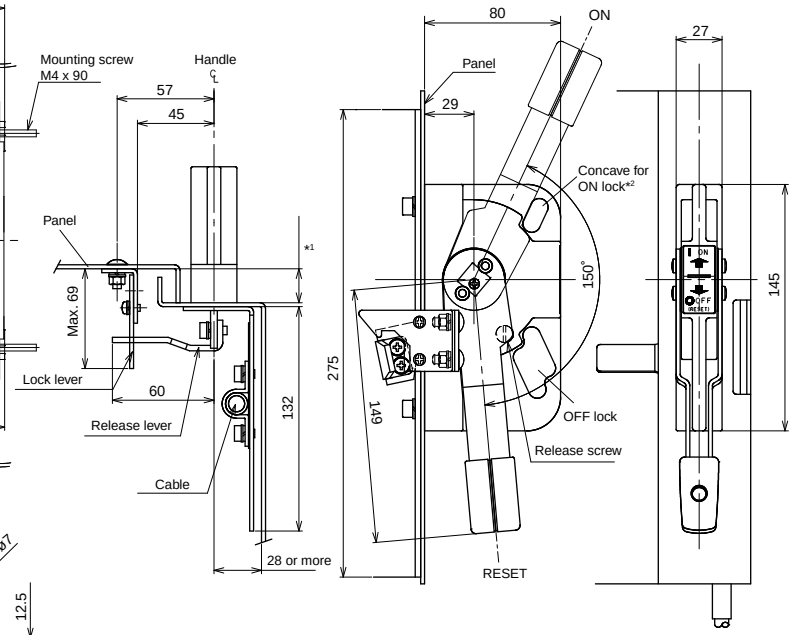

- This product consists of a drive section and an operation section.
- The operation section can be mounted either to the right or to the left on the panel depending on the mounting position of the release lever.
- For the OFF lock, 3 ø10 padlocks can be mounted; for the ON lock, 2 ø10 padlocks.

*1 Set the height to 20 or 30. Adjust the lock lever depending on the setting.
*2 The ON lock can be realized by additionally creating a concave for the ON lock.

Panel drilling

• **BW9F0HA**

Drive section

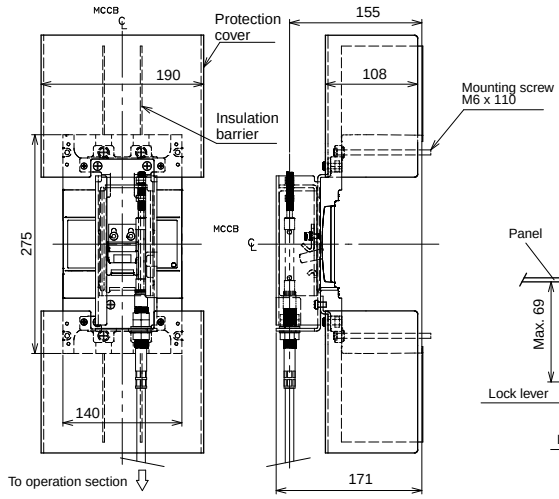

Operation section

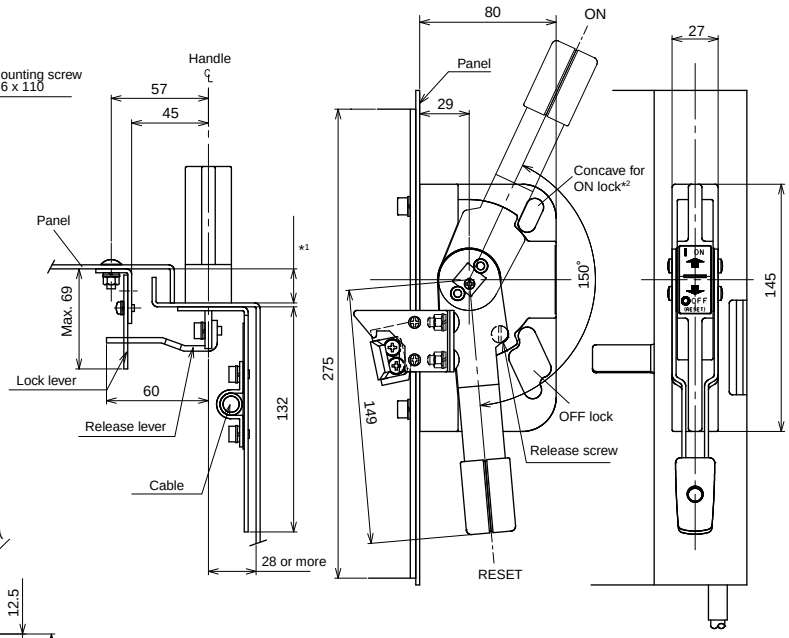

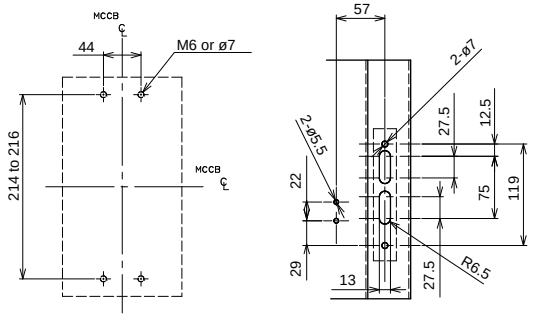

Panel drilling

- This product consists of a drive section and an operation section.
- The operation section can be mounted either to the right or to the left on the panel depending on the mounting position of the release lever.
- For the OFF lock, 3 ø10 padlocks can be mounted; for the ON lock, 2 ø10 padlocks.

*1 Set the height to 20 or 30. Adjust the lock lever depending on the setting.
*2 The ON lock can be realized by additionally creating a concave for the ON lock.

MCCB *	Handle type	Cable		Terminal cover
		Type	Length (m)	
BW125JAGU-3P BW125RAGU-2P BW125RAGU-3P	**BW9F0CA**	**BW9FWCA-15A** **BW9FWCA-20A** **BW9FWCA-30A**	1.5 2.0 3.0	**BW9FBTCA-L3**
BW250EAGU-2P BW250EAGU-3P BW250JAGU-2P BW250JAGU-3P BW250RAGU-2P BW250RAGU-3P	**BW9F0GA**	**BW9FWGA-15A** **BW9FWGA-20A** **BW9FWGA-30A**	1.5 2.0 3.0	**BW9FBTGA-L3**
BW400EAGU-2P BW400EAGU-3P BW400SAGU-2P BW400SAGU-3P BW400RAGU-2P BW400RAGU-3P BW400HAGU-2P BW400HAGU-3P	**BW9F0HA**	**BW9FWHA-15A** **BW9FWHA-20A** **BW9FWHA-30A**	1.5 2.0 3.0	**BW9FBTHA-L3**

Note: * Not available for BW125JAGU-2P

Steel enclosures

■ Description

Steel enclosures are available in three types — two with V-type handle which allows the operation from the outside and other with the operating handle of the breaker extending from it to allow it to be directly switched ON or OFF from outside the enclosure.
Enclosures with V-type handles are provided with a door interlocking mechanism which prevents the door from being opened in the ON condition.
Knockout holes for wiring use are provided as shown in the diagram.

Standard | **Dustproof** AF96-175 | **Rainproof** CP97-2636

■ Type of enclosures

MCCB	Enclosure		
	Standard *1	With V-type handle Dustproof *1*2	Rainproof *1*2
BW32 BW50 BW63	**BZ6C10C2 *3** **BZ6C10C3**	**BW9UVBA-3A *3**	**BW9UWBA-3A *3**
BW100	**BZ6C25C2 *3** **BZ6C25C3 *3**	**BW9UVBA-3B *3**	**BW9UWBA-3B *3**
BW125	**BW9UCCA-2** **BW9UCCA-3**	**BW9UVCA-3**	**BW9UWCA-3**
BW250	**BW9UCGA-3**	**BW9UVGA-3**	**BW9UWGA-3**
BW400	**BZ-C60B**	**BW9UVHA-3**	**BW9UWHA-3**
BW630 BW800	**BZ-C70B**	**BW9UVJA-3**	**–**

*1 No models are available for four-pole products.
*2 The appearance of dust-proof and rain-proof models differs from the photograph (400A frames and higher).
*3 Combination with external accessories(R) is not possible.

■ Ordering information

Specify the following:
1. Type number of enclosures

■ Dimensions, mm

Fig.1 Standard

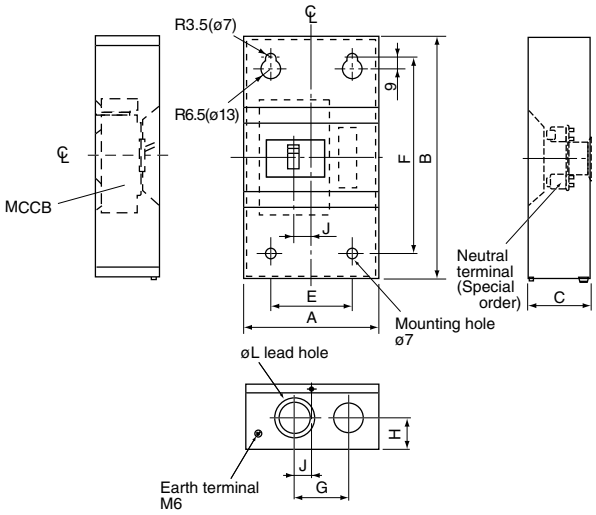

Fig.2 With V type handle
BW9UVBA-3A, BW9UVBA-3B
BW9UVCA-3, BW9UVGA-3

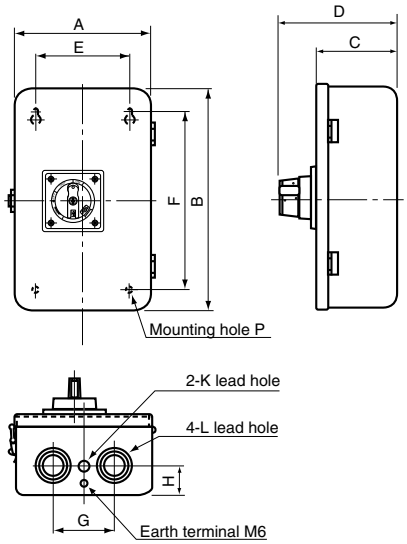

Fig3. With V type handle
BW9UVHA-3, BW9UVJA-3

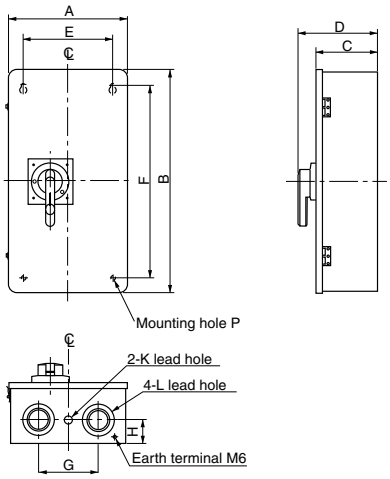

■ Connection method diagrams

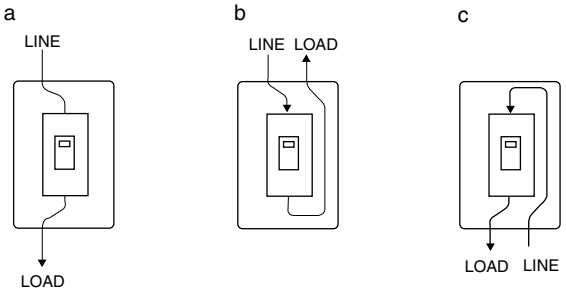

Type	Connection	Fig.	A	B	C	D	E	F	G	H	J	K	L	P
BZ6C10C2	a, b, c	1	135	225	95	–	90	170	65	40	25	–	ø35, ø22	–
BZ6C10C3														
BZ6C25C2			200	320	95	–	120	240	80	40	25	–	ø45, ø30	–
BZ6C25C3														
BW9UCCA-2			200	320	103	–	120	240	80	40	25	–	ø45, ø30	–
BW9UCCA-3														
BW9UCGA-3				360				280		45			ø55, ø40	
BZ-C60B			400	750	175	–	300	650	200	80	100	–	ø106, ø78, ø63	–
BZ-C70B														
BW9UVBA-3A		2	180	300	114	178.5	100	220	70	40	–	–	ø28, ø35, ø43	ø7
BW9UVBA-3B			250	400	142	206.5	170	320	110	50	–	ø23	ø35, ø52, ø63	ø9
BW9UVCA-3						207								
BW9UVGA-3														
BW9UVHA-3		3	400	750	206	269	300	650	200	80	–	ø28	ø63, ø78, ø106	ø12
BW9UVJA-3														

Terminal covers

■ Description
These terminal covers are used as guards to prevent accidental touch with live line terminations.
These terminal covers can be fitted to either line or load side.

● Up to 400AF
Short type: BW9BT □ A-S □
• Snap-on fitting
Long type: BW9BT □ A-L □
• Crimp connection use

● 630, 800AF
Long type: BW9BTJA-L □
• Transparent

Short type **Long type**

Long type

Type		No. of poles	MCCB	Dimensions (mm)			Packing quantity	Appearance
Transparent	Gray			A	B	C		
BW9BTAA-L2	**BW9BTAA-L2W**	2	BW32□-2P BW50□-2P BW63□-2P BW100□-2P	50	40	53	2	• Preventing exposure of live section when amplifier's terminals are connected • Snap-on mounting
BW9BTAA-L3	**BW9BTAA-L3W**	2, 3	BW32□-3P BW50□-3P BW63□-3P BW100□-3P	75	40	53	2	
BW9BTCA-L2	**BW9BTCA-L2W**	2	BW125JAG-2P	60	40	66.5	2	
BW9BTCA-L3	**BW9BTCA-L3W**	2, 3	BW50HAG-2P BW50HAG-3P BW125RAG-2P BW125HAG-2P BW125□-3P	90	40	66.5	2	
BW9BTCA-C3	**–**	2, 3	BW125RAG-2P BW125□-3P	90	60	66.5	2	
BW9BTCA-L4	**BW9BTCA-L4W**	4	BW125JAG-4P BW125RAG-4P	120	40	66.5	2	
BW9BTGA-L3 *1	**BW9BTGA-L3W *1**	2, 3	BW160□-2P BW160□-3P	105	50	66.5	2	
BW9BTGA-L4 *1	**BW9BTGA-L4W *1**	4	BW160□-4P	140	50	66.5	2	
BW9BTGA-C3	**–**	2, 3	BW250□-2P BW250□-3P	105	75	66.5	2	
BW9BTGA-L3 *1	**BW9BTGA-L3W *1**	2, 3	BW250□-2P BW250□-3P	105	50	66.5	2	
BW9BTGA-L4 *1	**BW9BTGA-L4W *1**	4	BW250□-4P	140	50	66.5	2	
BW9BTHA-L3 *2	**BW9BTHA-L3W *1**	2, 3	BW400□-2P BW400□-3P	172	110	98	2	
BW9BTHA-L4 *2	**–**	4	BW400□-4P	220	110	98	2	
BW9BTJA-L3	**BW9BTJA-L3W**	3	BW630□-3P BW800□-3P	230	135	97.5	2	
BW9BTJA-L4	**BW9BTJA-L4W**	4	BW630□-4P BW800□-4P	280	155	98	2	

Short type

Type		No. of poles	MCCB	Dimensions (mm)			Packing quantity	Appearance
Transparent	Gray			A	B	C		
BW9BTAA-S2	**BW9BTAA-S2W**	2	BW32□-2P BW50□-2P BW63□-2P BW100□-2P	50	10	53	2	• Preventing exposure of live section when amplifier's terminals are connected • Snap-on mounting
BW9BTAA-S3	**BW9BTAA-S3W**	2, 3	BW32□-3P BW50□-3P BW63□-3P BW100□-3P	75	10	53	2	
BW9BTCA-S2P20	**BW9BTCA-S2WP20**	2	BW125JAG-2P	60	8	66.5	2	
BW9BTCA-S3P20	**BW9BTCA-S3WP20**	2, 3	BW50HAG-2P BW50HAG-3P BW125RAG-2P BW125HAG-2P BW125□-3P	90	8	66.5	2	
BW9BTCA-S4P20	**BW9BTCA-S4WP20**	4	BW125JAG-4P BW125RAG-4P	120	8	66.5	2	
BW9BTGA-S3P20 *1	**BW9BTGA-S3WP20 *1**	2, 3	BW160□-2P BW160□-3P BW250□-2P BW250□-3P	105	8	66.5	2	
BW9BTGA-S4P20 *1	**BW9BTGA-S4WP20 *1**	4	BW160□-4P BW250□-4P	140	8	66.5	2	
BW9BTHA-S3 *3	**BW9BTHA-S3W *2**	2, 3	BW400□-2P BW400□-3P	140	65	98	2	
BW9BTHA-S4 *3	**BW9BTHA-S4W *2**	4	BW400□-4P	185	65	98	2	

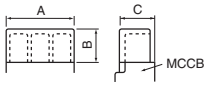

Notes: • A gray-white terminal cover comes standard with the Global Series 125AF and 250AF.
*1 When using the external operating handle, part of the terminal cover (▨) must be cut away.
*2 Crimp terminals for 325 mm^2 are not available.
*3 This type of cover can be mounted on the 400AF when flat terminals are not used.

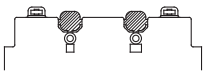

Insulation barriers

■ Description

The interphase barriers are provided on frame size of 32AF to 800AF breakers for front mounting. The barriers are installed in the molded slots between terminals.
The earth barrier is used to increase the insulation with the mounting plate surface when two crimp terminals are wired. Installation of these barriers after wiring is possible even when an external accessory is installed.

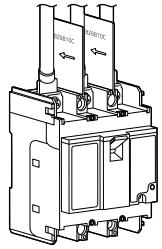

Interphase barrier

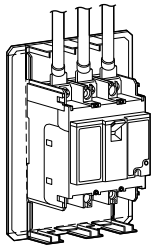

Earth barrier

Interphase barrier

MCCB	Interphase barrier				
	Type	Dimensions (mm)		Packing quantity	Mass (g)
		A	B		
BW32 BW50AAG, EAG BW50SAG, RAG BW63 BW100	**BZ6B10C**	50	49	4	23
BW50HAG, BW125	**BW9BPCA**	50	60	2	15
BW160 BW250	**BW9BPGA**	80	60	2	25
BW400 BW630 BW800	**B-43A**	105	95	4	130

Interphase barrier

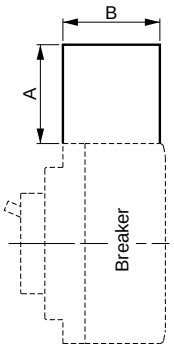

Earth barrier

MCCB	Earth barrier				
	Type	Dimensions (mm)		Packing quantity	Mass (g)
		A	B		
BW32□-2P BW50□-2P BW63□-2P BW100□-2P	**BZ6BL10C2**	100 (50, 75)*[1]	43 (30)*[1]	1	33
BW32□-3P BW50□-3P BW63□-3P BW100□-3P	**BZ6BL10C3**	125 (75, 100)*[1]	43 (30)*[1]	1	41

Note: *[1] Can be cut to dimensions

Earth barrier

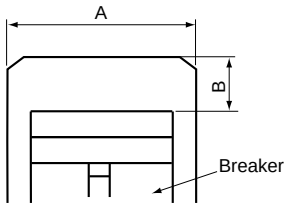

Padlocking device and handle locking cover

■ Description

• Padlocking device

These padlocking device lock the Breaker handle in the OFF position. Use a commercially available padlock with a shackle diameter of 3.5 to 5mm (5mm for the BZ6L10CA).

• Handle locking covers (Order Separately)

These simple handle locking covers can be easily installed by the user. Tripping is possible while the Breaker is locked ON.

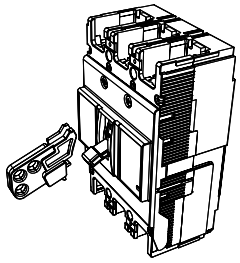

Padlocking device
• Cap type Q1,QN

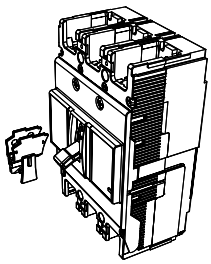

Handle locking cover

MCCB	Padlocking device			Handle locking cover
	Q1: Cap type	QN: Scissors type	Q2: Plate type	
BW32	**BZ6L10CA**	–	▲ *1*4	**BZ6L10C**
BW50AAG, EAG, SAG, RAG				
BW63				
BW100				
BW50HAG, BW125	**BW9Q1CA** *5		**BW9Q2CA** *3	**BW9L1CA**
BW160			**BW9Q2GA**	
BW250				
BW400	▲ *1	**BW9QNHA** *2	**BW9Q2HA**	**BW9L1HA**
BW630			**BW9Q2JA**	
BW800				

Notes:
*1 Specify Locks when ordering the Breaker. (▲: Factory-mounted)
*2 ON and OFF locking is possible.
*3 Not applicable to the BW125JA□-2P (models with a width of 60 mm).
*4 If a padlock is required, use a commercially available padlock with the dimensions shown in the diagram at the right.
*5 Three padlocks with shackles from 3.5 to 8 mm in diameter can be attached.

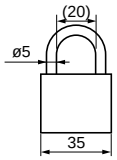

Padlocking device
• Cap type Q1

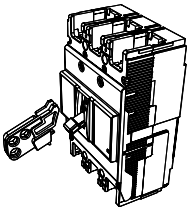

• Plate type Q2

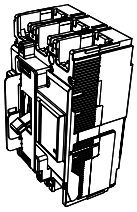

Handle locking cover

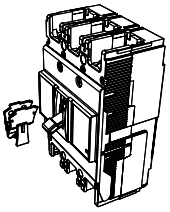

Q1: BZ6L10CA (OFF-locking Padlocking device)

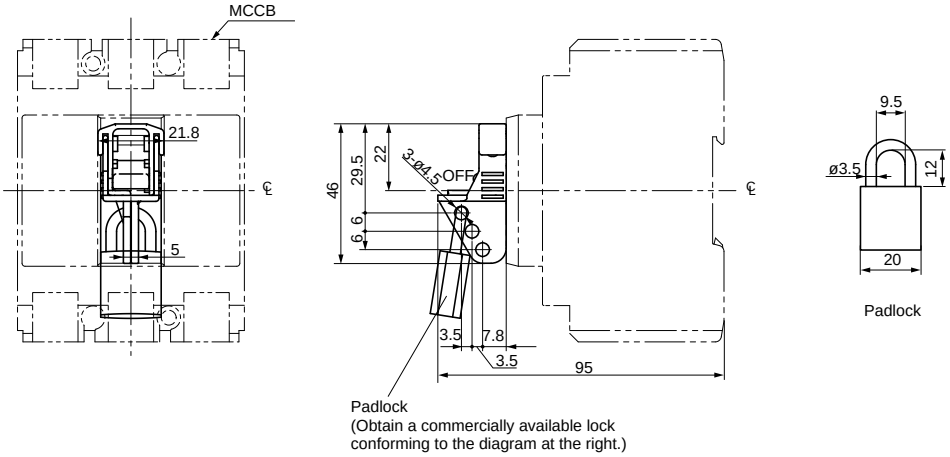

■ Description

We've expanded our MCCB lineup with the addition of models with global frame sizes of 160AF and 250AF.

• Compact

We've reduced external dimensions and increased modularization to the limits. Customers can now reduce costs in panel design and manufacturing. We've applied high-performance technology to achieve 100AF to 250AF models with a uniform depth of 60 mm. The size of the MCCB of 250AF has been significantly reduced.

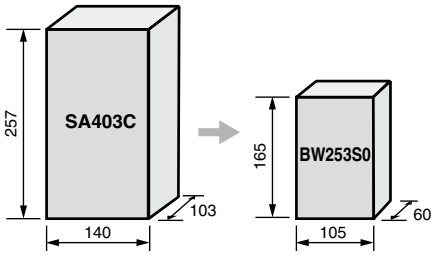

Compact design has been realized for the MCCB family series from 100AF to 250AF. We've achieved a Ics of 50% Icu. Using uniform external dimensions provides flexibility in responding to changes in specifications. 100AF models can be mounted on IEC 35mm rail for easy panel mounting.

• Cassette

User installation provides for speedy on-site response to changes in specifications. All accessories can be assembled by the user. Quickly adaptable to the many onsite changes in specifications.

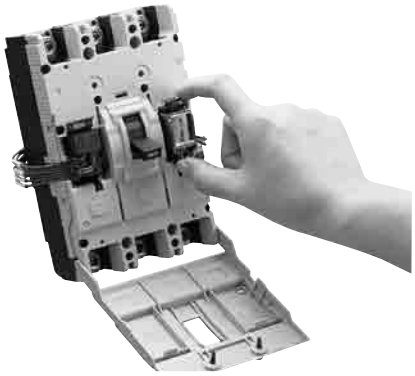

• Global

The BW0 series complies with the IEC standards in pursuit of global standards. The newly introduced frame sizes 160AF and 250AF fully comply with IEC standards while providing the required safety. The BW0 series complies IEC 60947-2. Standards conformity information is given on the nameplate. Gray front case has been adopted.

Application by breaking capacity

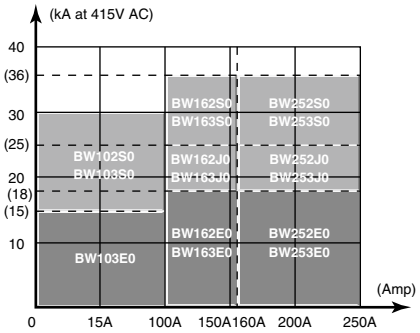

■ IEC and CE marking conformed

Series	Breaker ampere frame	Type	Pole	Rated current (A)	Insulation voltage Ui (V)	Breaking capacity (kA) [Icu/Ics] IEC60947-2 AC		
						230V	380V	415V
BW0	100	**BW103E0**	3	15, 20, 25, 30, 40, 50, 60, 75, 80, 100	690	25/13	18/9	15/8
		BW102S0	2	15, 20, 25, 30, 40, 50, 60, 75, 80, 100	690	50/25	30/15	30/8
		BW103S0	3	15, 20, 25, 30, 40, 50, 60, 75, 80, 100	690	100/50	30/15	30/8
	160	**BW162E0**	2	100, 125, 150, 160	690	25/13	18/9	18/9
		BW163E0	3	100, 125, 150, 160	690	25/13	18/9	18/9
		BW162J0	2	100, 125, 150, 160	690	50/25	25/13	25/13
		BW163J0	3	100, 125, 150, 160	690	50/25	25/13	25/13
		BW162S0	2	100, 125, 150, 160	690	85/43	36/18	36/18
		BW163S0	3	100, 125, 150, 160	690	85/43	36/18	36/18
	250	**BW252E0**	2	175, 200, 225, 250	690	25/13	18/9	18/9
		BW253E0	3	175, 200, 225, 250	690	25/13	18/9	18/9
		BW252J0	2	175, 200, 225, 250	690	50/15	25/13	25/13
		BW253J0	3	175, 200, 225, 250	690	50/15	25/13	25/13
		BW252S0	2	175, 200, 225, 250	690	85/43	36/18	36/18
		BW253S0	3	175, 200, 225, 250	690	85/43	36/18	36/18

■ Type number nomenclature

BW 25 3 E0 / 250

Series

Frame size
10: 100AF
16: 160AF
25: 250AF

Rated current

15: 15A	100: 100A
20: 20A	125: 125A
25: 25A	150: 150A
30: 30A	160: 160A
40: 40A	175: 175A
50: 50A	200: 200A
60: 60A	225: 225A
75: 75A	250: 250A
80: 80A	

Number of poles
2: 2-pole
3: 3-pole

BW0 series /2, 3-pole IEC and CE marking conformed types

Frame		100A			160A	
Pole		3	2	3	2	3
Type		**BW103E0**	**BW102S0**	**BW103S0**	**BW162E0**	**BW163E0**
Rated current (A)		15, 20, 25, 30, 40, 50, 60, 75, 80, 100	15, 20, 25, 30, 40, 50, 60, 75, 80, 100		100, 125, 150, 160	
Rated insulation voltage	(V AC)	690	690		690	
[IEC 60947-2, JIS C8201-2]	(V DC)	250	250		250	
Rated breaking capacity (kA)	600V AC	–	–	–	–	–
[IEC 60947-2, JIS C8201-2]	550V AC	5/3	10/3	10/3	5/3	5/3
(Icu/Ics) *1	440V AC	10/5	20/5	20/5	10/5	10/5
	415V AC	15/8	30/8	30/8	15/8	15/8
	400V AC	15/8	30/15	30/15	15/8	15/8
	380V AC	18/9	30/15	30/15	18/9	18/9
	240V AC	25/13	50/25	100/50	25/13	25/13
	230V AC	25/13	50/25	100/50	25/13	25/13
	250V DC	5/3	5	10	5/3	5/3
Rated operating voltage [UL508] (VAC)		–	–	–	480	480
Dimensions (mm)	a	75	50	75	105	105
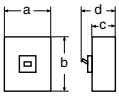	b	130	130	130	165	165
Page 06/100	c	60	60	60	60	60
	d	81	81	81	86	86
Mass (kg) Front mounting type		0.78	0.6	0.78	1.36	1.36
Tripping device		Thermal-magnetic				
Front mounting, front connection		●	●	●	●	●
Internal accessories	*Page 06/104*					
Auxiliary switch	(AUX)	BW9W1SB0	BW9W1SB0	BW9W1SB0	BW9W1SG0	BW9W1SG0
Alarm switch	(AL)	BW9K1SB0	BW9K1SB0	BW9K1SB0	BW9K1SG0	BW9K1SG0
Auxiliary switch + alarm switch	(AUX+AL)	BW9WKSB0	BW9WKSB0	BW9WKSB0	BW9WKSG0	BW9WKSG0
Shunt trip	(SHT)	BW9F□B0	BW9F□B0	BW9F□B0	BW9F□G0	BW9F□G0
Undervoltage trip	(UVR)	BW9R□B0	BW9R□B0	BW9R□B0	BW9R□G0	BW9R□G0
External accessories	*Page 06/107*					
Operating handle N-type		BW9N0B0	BW9N0B0	BW9N0B0	BZ-N40C	BZ-N40C
Operating handle V-type		BW9V0B0	BW9V0B0	BW9V0B0	BZ6V40C	BZ6V40C
Terminal cover Short		–	–	–	BZ-TS40B	BZ-TS40B
Terminal cover Long		BW9BTB0-L3	–	BW9BTB0-L3	BZ-TB40B	BZ-TB40B
Insulation barrier Interphase		BW9BPB0	BW9BPB0	BW9BPB0	BZ-B40B	BZ-B40B
Flat terminal		–	–	–	BZ-S50B-2252	BZ-S50B-2253
Block terminal		BW9SSL0B0-□	BW9SSL0B0-□	BW9SSL0B0-□	BW9SSL0G0	BW9SSL0G0
Handle locking device		BW9Q1B0	BW9Q1B0	BW9Q1B0	BW9Q1G0	BW9Q1G0
IEC 35mm rail mounting		BW9PDB0	BW9PDB0	BW9PDB0	–	–

Notes: *1 Icu: Rated ultimate short-circuit breaking capacity
Ics: Rated service short-circuit breaking capacity

● Available − Not available

BW0 series /2, 3-pole IEC and CE marking conformed types

Frame		160A				250A	
Pole		2	3	2	3	2	3
Type		**BW162J0**	**BW163J0**	**BW162S0**	**BW163S0**	**BW252E0**	**BW253E0**
Rated current (A)		100, 125, 150, 160		100, 125, 150, 160		175, 200, 225, 250	
Rated insulation voltage	(V AC)	690		690		690	
[IEC 60947-2, JIS C8201-2]	(V DC)	250		250		250	
Rated breaking capacity (kA)	600V AC	–	–	–	–	–	–
[IEC 60947-2, JIS C8201-2]	550V AC	8/4	8/4	10/5	10/5	5/3	5/3
(Icu/Ics) *1	440V AC	20/10	20/10	25/13	25/13	15/8	15/8
	415V AC	25/13	25/13	36/18	36/18	18/9	18/9
	400V AC	25/13	25/13	36/18	36/18	18/9	18/9
	380V AC	25/13	25/13	36/18	36/18	18/9	18/9
	240V AC	50/25	50/25	85/43	85/43	25/13	25/13
	230V AC	50/25	50/25	85/43	85/43	25/13	25/13
	250V DC	20/10	20/10	30/15	30/15	5/3	5/3
Rated operating voltage [UL508] (VAC)		480	480	480	480	480	480
Dimensions (mm)	a	105	105	105	105	105	105
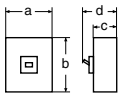	b	165	165	165	165	165	165
Page 06/101	c	60	60	60	60	60	60
	d	86	86	86	86	86	86
Mass (kg) Front mounting type		1.36	1.56	1.36	1.56	1.36	1.56
Tripping device		Thermal-magnetic					
Front mounting, front connection		●	●	●	●	●	●
Internal accessories	*Page 06/104*						
Auxiliary switch	(AUX)	BW9W1SG0	BW9W1SG0	BW9W1SG0	BW9W1SG0	BW9W1SG0	BW9W1SG0
Alarm switch	(AL)	BW9K1SG0	BW9K1SG0	BW9K1SG0	BW9K1SG0	BW9K1SG0	BW9K1SG0
Auxiliary switch + alarm switch	(AUX+AL)	BW9WKSG0	BW9WKSG0	BW9WKSG0	BW9WKSG0	BW9WKSG0	BW9WKSG0
Shunt trip	(SHT)	BW9F□G0	BW9F□G0	BW9F□G0	BW9F□G0	BW9F□G0	BW9F□G0
Undervoltage trip	(UVR)	BW9R□G0	BW9R□G0	BW9R□G0	BW9R□G0	BW9R□G0	BW9R□G0
External accessories	*Page 06/107*						
Operating handle N-type		BZ-N40C	BZ-N40C	BZ-N40C	BZ-N40C	BZ-N40C	BZ-N40C
Operating handle V-type		BZ6V40C	BZ6V40C	BZ6V40C	BZ6V40C	BZ6V40C	BZ6V40C
Terminal cover Short		BZ-TS40B	BZ-TS40B	BZ-TS40B	BZ-TS40B	BZ-TS40B	BZ-TS40B
Terminal cover Long		BZ-TB40B	BZ-TB40B	BZ-TB40B	BZ-TB40B	BZ-TB40B	BZ-TB40B
Insulation barrier Interphase		BZ-B40B	BZ-B40B	BZ-B40B	BZ-B40B	BZ-B40B	BZ-B40B
Flat terminal		BZ-S50B-2252	BZ-S50B-2253	BZ-S50B-2252	BZ-S50B-2253	BZ-S50B-2252	BZ-S50B-2253
Block terminal		BW9SSL0G0	BW9SSL0G0	BW9SSL0G0	BW9SSL0G0	BW9SSL0G0	BW9SSL0G0
Handle locking device		BW9Q1G0	BW9Q1G0	BW9Q1G0	BW9Q1G0	BW9Q1G0	BW9Q1G0
IEC 35mm rail mounting		–	–	–	–	–	–

Notes: *1 Icu: Rated ultimate short-circuit breaking capacity
Ics: Rated service short-circuit breaking capacity

● Available – Not available

06

BW0 series /2, 3-pole IEC and CE marking conformed types

Frame		250A			
Pole		2	3	2	3
Type		**BW252J0**	**BW253J0**	**BW252S0**	**BW253S0**
Rated current (A)		175, 200, 225, 250		175, 200, 225, 250	
Rated insulation voltage (V AC)		690		690	
[IEC 60947-2, JIS C8201-2] (V DC)		250		250	
Rated breaking capacity (kA)	600V AC	–	–	–	–
[IEC 60947-2, JIS C8201-2]	550V AC	8/4	8/4	10/5	10/5
(Icu/Ics) *1	440V AC	20/10	20/10	25/13	25/13
	415V AC	25/13	25/13	36/18	36/18
	400V AC	25/13	25/13	36/18	36/18
	380V AC	25/13	25/13	36/18	36/18
	240V AC	50/15	50/15	85/43	85/43
	230V AC	50/15	50/15	85/43	85/43
	250V DC	20/10	20/10	30/15	30/15
Rated operating voltage [UL508] (VAC)		480	480	480	480
Dimensions (mm)	a	105	105	105	105
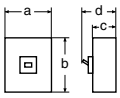	b	165	165	165	165
Page 06/101	c	60	60	60	60
	d	86	86	86	86
Mass (kg) Front mounting type		1.36	1.56	1.36	1.56
Tripping device		Thermal-magnetic			
Front mounting, front connection		●	●	●	●
Internal accessories	*Page 06/104*				
Alarm switch	(AUX)	BW9W1SG0	BW9W1SG0	BW9W1SG0	BW9W1SG0
Auxiliary switch	(AL)	BW9K1SG0	BW9K1SG0	BW9K1SG0	BW9K1SG0
Auxiliary switch + alarm switch	(AUX+AL)	BW9WKSG0	BW9WKSG0	BW9WKSG0	BW9WKSG0
Shunt trip	(SHT)	BW9F□G0	BW9F□G0	BW9F□G0	BW9F□G0
Undervoltage trip	(UVR)	BW9R□G0	BW9R□G0	BW9R□G0	BW9R□G0
External accessories	*Page 06/107*				
Operating handle N-type		BZ-N40C	BZ-N40C	BZ-N40C	BZ-N40C
Operating handle V-type		BZ6V40C	BZ6V40C	BZ6V40C	BZ6V40C
Terminal cover Short		BZ-TS40B	BZ-TS40B	BZ-TS40B	BZ-TS40B
Terminal cover Long		BZ-TB40B	BZ-TB40B	BZ-TB40B	BZ-TB40B
Insulation barrier Interphase		BZ-B40B	BZ-B40B	BZ-B40B	BZ-B40B
Flat terminal		BZ-S50B-2252	BZ-S50B-2253	BZ-S50B-2252	BZ-S50B-2253
Block terminal		BW9SSL0G0	BW9SSL0G0	BW9SSL0G0	BW9SSL0G0
Handle locking device		BW9Q1G0	BW9Q1G0	BW9Q1G0	BW9Q1G0
IEC 35mm rail mounting		–	–	–	–

Notes: *1 Icu: Rated ultimate short-circuit breaking capacity
Ics: Rated service short-circuit breaking capacity

● Available − Not available

■**Terminal Connection/Front mounting, Front Connection**

• MCCBs and cables according to the screw size and tightening torque as shown in the table below.
• To facilitate the connecting work, the following parts are prepared.
Flat terminal and block terminal: *See page 06/108*

Frame	MCCB type		Screw and Bolt	Size (mm)	Tightening torque [N·m]
100A	BW103E0	BW102S0, BW103S0	Pan-head screw	Rated current: 15 to 50A M5 13.5	2
			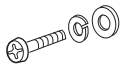	Rated current: 60 to 100A M8 13.5	5.5
160A	BW162E0, BW163E0	BW162J0, BW163J0	Hexagonal socket head bolt	M8 16	8-13
		BW162S0, BW163S0			
250A	BW252E0, BW253E0	BW252J0, BW253J0			
		BW252S0, BW253S0			

■ **Dimensions, mm**
■ **Front mounting, front connection**

BW103E0
BW102S0, BW103S0

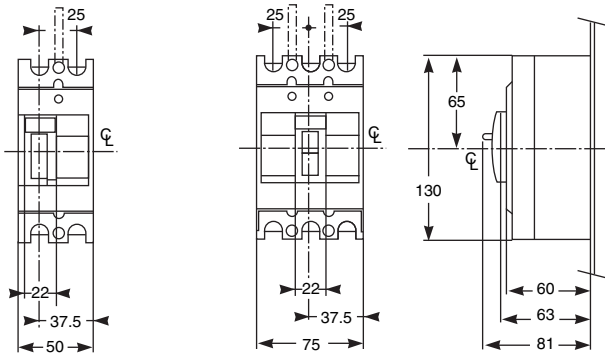

2-pole **3-pole**

• **Mounting on IEC 35mm rail**
(with optional rail mounting adapter)

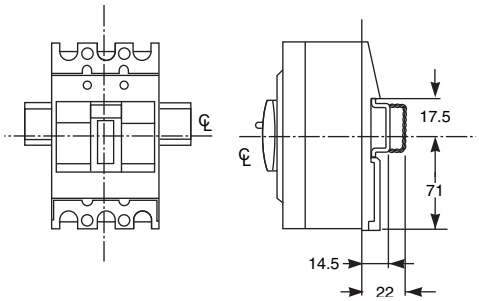

Panel drilling

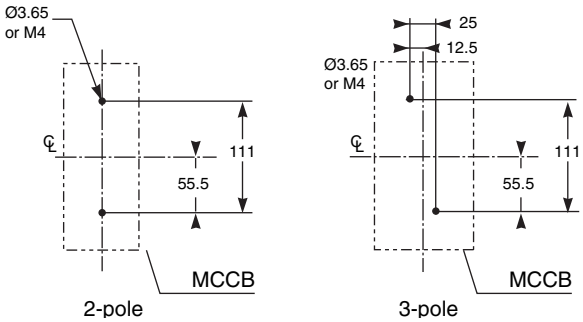

■ **Dimensions, mm**
■ **Front mounting, front connection**

BW163E0, BW252E0, BW253E0,
BW162J0, BW163J0, BW162S0, BW163S0, BW252J0, BW253J0, BW252S0, BW253S0

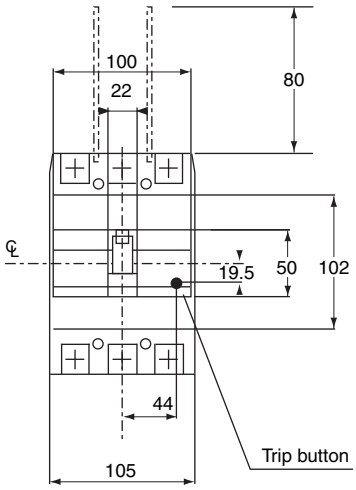

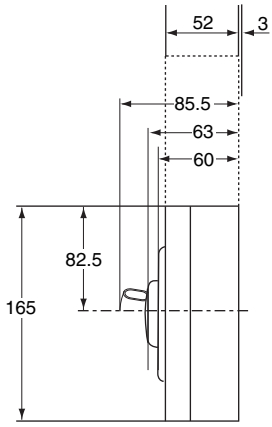

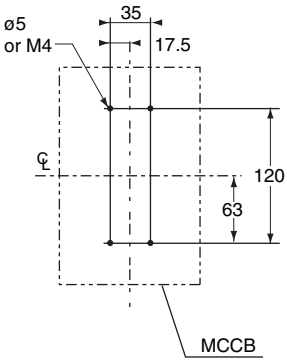

■ **Undervoltage trip device**

For 160 and 250AF

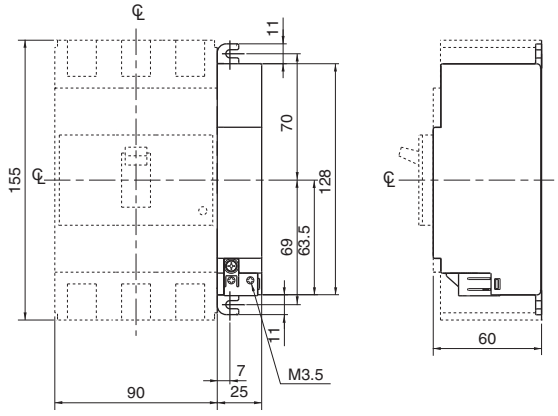

■ BW0 series, 2, 3-pole

BW103E0,
BW102S0, BW103S0

15A

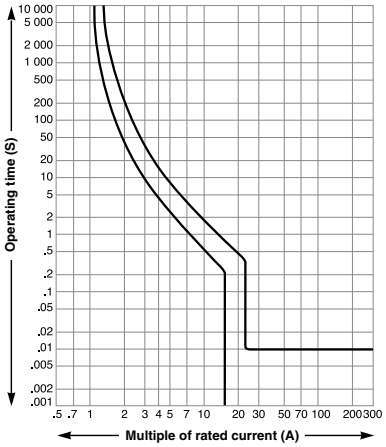

20A

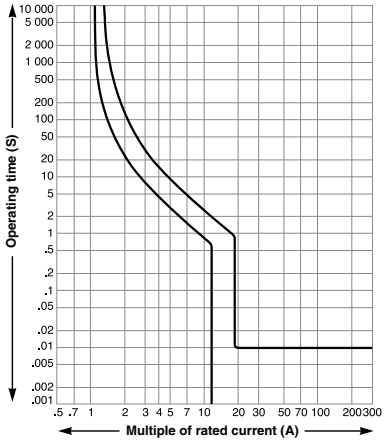

25A

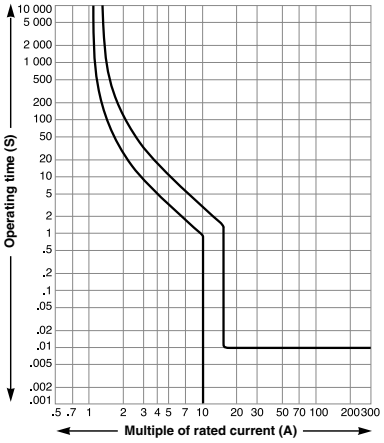

30A

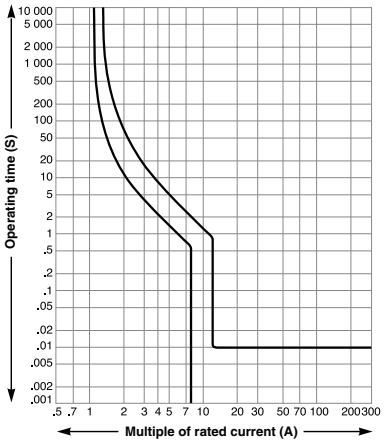

40A

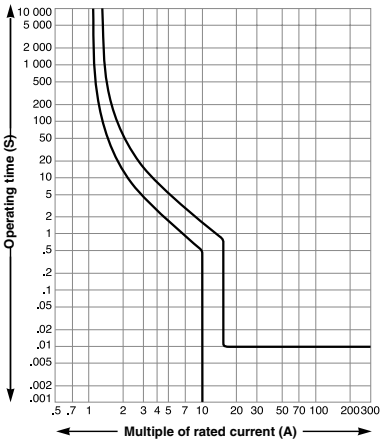

50A

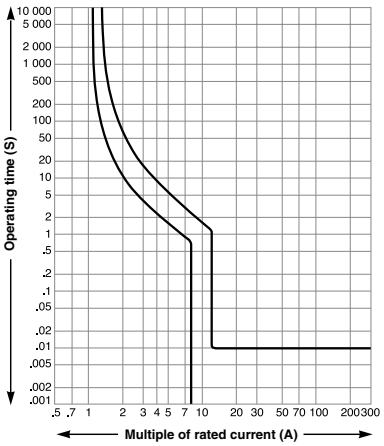

60A

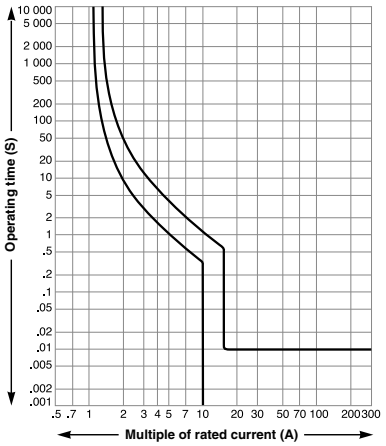

75A

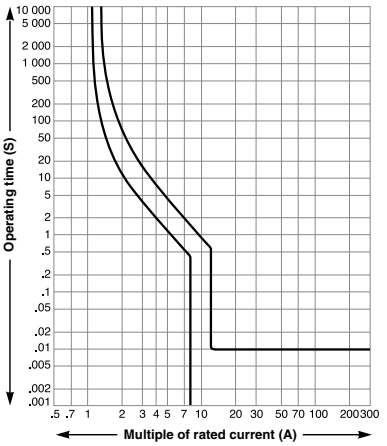

80A

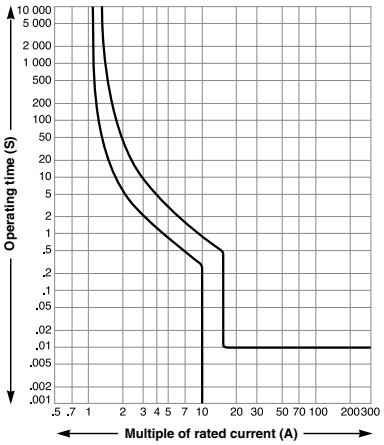

■ BW0 series, 2, 3-pole

BW103E0,
BW102S0, BW103S0

100A

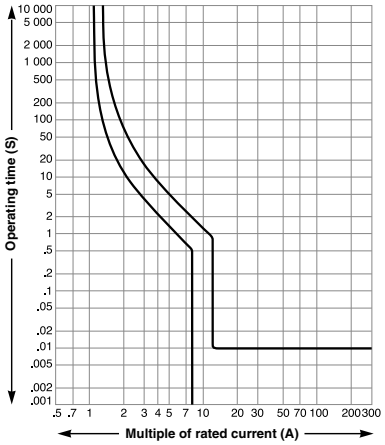

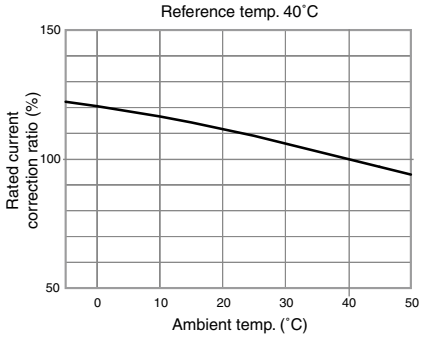

BW162E0, BW163E0, BW252E0, BW253E0,
BW252J0, BW253J0, BW162J0, BW163J0, BW162S0, BW163S0, BW252S0, BW253S0

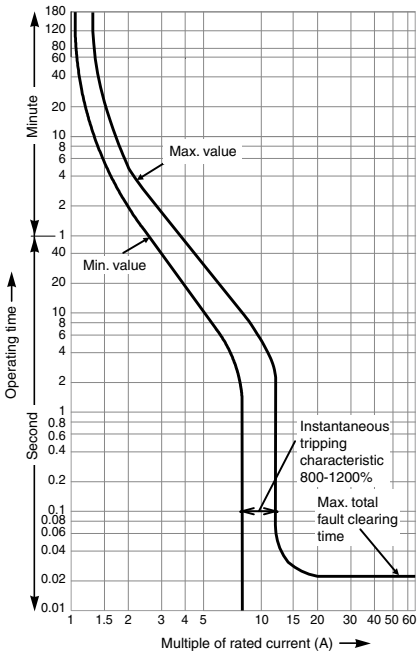

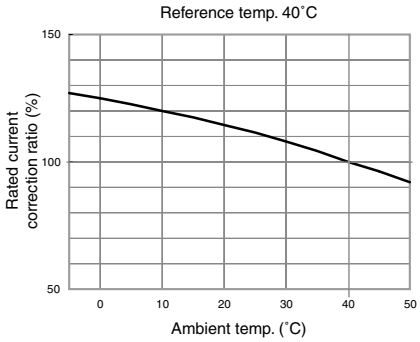

06

Internal accessories

The number of tasks can be greatly reduced as all the internal accessories are cassette-type user-installed.

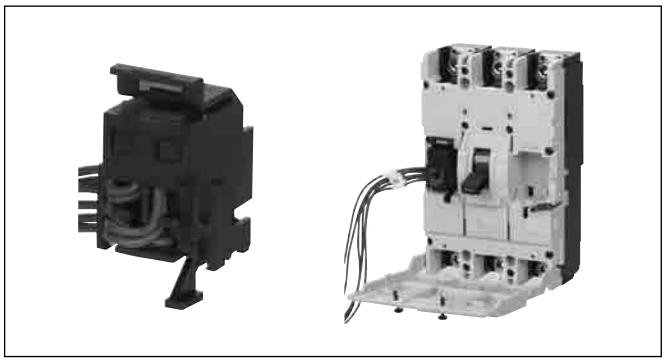

■ Auxiliary switch and alarm switch

These devices indicate the MCCB's operation status electrically.
Auxiliary switch (AUX) indicates the ON/OFF status of MCCB.
Alarm switch (AL) indicates the trip status of MCCB. An MCCB trips when an overload occurs or a short-circuit current flows through the MCCB. Both the auxiliary switch and alarm switch can be installed either on the right or left side of MCCB body.
All auxiliary switches (AUX) and alarm switches (AL) are electrically pre-wired with wires of 1 mm^2, 500 mm long.
The auxiliary switch, alarm switch and auxiliary plus alarm switch have almost the same appearance.

Combination of MCCB

Frame	MCCB Type		Type		
			Auxiliary switch (AUX)	Alarm switch (AL)	Auxiliary switch + alarm switch (AUX+AL)
100A	BW103E0	BW102S0, BW103S0	**BW9W1SB0**	**BW9K1SB0**	**BW9WKSB0**
160A	BW162E0, BW163E0	BW162J0, BW163J0 BW162S0, BW163S0	**BW9W1SG0**	**BW9K1SG0**	**BW9WKSG0**
250A	BW252E0, BW253E0	BW252J0, BW253J0 BW252S0, BW253S0			

■ Rating of auxiliary switches (AUX) and alarm switches (AL)

Type number	AC			DC			Mini. load current
	Voltage (V)	Make/Break current (A)		Voltage (V)	Make/Break current (A)		
		AC12	AC15		DC12	DC14	
BW9W1SB0	24	5	5	24	4	3	5V DC 160mA
BW9K1SB0	48	5	5	48	2.5	1	30V DC 30mA
BW9WKSB0	125	5	3	125	0.4	0.4	
	250	3	2	250	0.2	0.2	
BW9W1SG0	24	5	5	24	4	3	
BW9K1SG0	48	5	5	48	2.5	1	
BW9WKSG0	125	5	3	125	0.4	0.4	
	250	3	2	250	0.2	0.2	

■ Operation of auxiliary switches(AUX) and alarm switches(AL)

Accessory	Handle position		
	ON	OFF	Trip
Auxiliary switch (AUX)	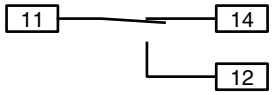	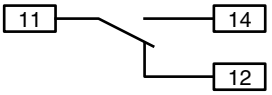	
Alarm switch (AL)	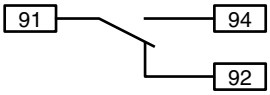		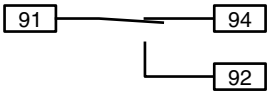

■ Shunt trip and undervoltage trip device

Shunt trip (SHT) is a device that issues an electrical signal to trip the MCCB.
Undervoltage trip device (UVR) is a device that is used to trip the MCCB when the main circuit voltage drops lower than the specified value. Both the shunt trip and undervoltage trip device can be installed on the right side of MCCB body.

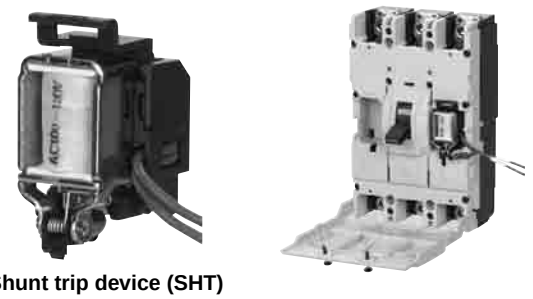

Shunt trip device (SHT)

■ Combination of MCCB and shunt trip device

Frame		Type	Operating voltage code	
100A	BW103E0	**BW9FAB0**	A	100-130V AC
	BW102S0, BW103S0	**BW9FKB0**	K	200-277V AC
		BW9FPB0	P	380-480V AC
		BW9FRB0	R	24V DC
		BW9FSB0	S	48V DC
160A	BW162E0, BW163E0	**BW9FAG0**	A	100-120V AC
250A	BW162J0, BW163J0	**BW9F1G0**	1	120-130V AC
	BW162S0, BW163S0	**BW9FKG0**	K	200-240V AC
	BW252E0, BW253E0	**BW9FBG0**	B	277V AC
	BW252J0, BW253J0	**BW9FPG0**	P	380-440V AC
	BW252S0, BW253S0	**BW9FHG0**	H	440-480V AC
		BW9FRG0	R	24V DC
		BW9FSG0	S	48V DC

06

■ Combination of MCCB and undervoltage trip device (UVR)

Frame		Type	Operating voltage code	
100A	BW103E0	**BW9RAB0**	A	100-130V AC
	BW102S0, BW103S0	**BW9RKB0**	K	200-240V AC
		BW9RBB0	B	277V AC
		BW9RPB0	P	380-415V AC
		BW9RHB0	H	440-480V AC
		BW9RRB0	R	24V DC
		BW9RSB0	S	48V DC
		BW9RLB0	L	125V DC
160A	BW162E0, BW163E0	**BW9RAG0**	A	100-130V AC
250A	BW162J0, BW163J0	**BW9RKG0**	K	200-240V AC
	BW162S0, BW163S0	**BW9RBG0**	B	277V AC
	BW252E0, BW253E0	**BW9RPG0**	P	380-415V AC
	BW252J0, BW253J0	**BW9RHG0**	H	440-480V AC
	BW252S0, BW253S0	**BW9RRG0**	R	24V DC
		BW9RSG0	S	48V DC
		BW9RLG0	L	125V DC

Shunt trip devices (SHT) are capable of internal mounting only.
Undervoltage trip device (UVR) for 100AF is capable of internal mounting only.
Undervoltage trip device (UVR) for 160AF and 250AF is capable of external mounting only.

External mounting undervoltage trip device (UVR)

■ Ratings of shunt trip (SHT)

Type	Power consumption		Time rating of coil	Operating time (ms)	Allowable voltage fluctuation
	AC VA	DC W			
BW9F□B0	30	30	Continuous	13 to 21	AC voltage: 85% to 110% of coil rated voltage DC voltage: 75% to 125% of coil rated voltage
BW9F□G0	30	35			

■ Ratings of undervoltage trip device (UVR)

Type	Coil rated voltage	Power consumption		Allowable voltage fluctuation
		AC VA	DC W	
BW9R□B0	110-130V AC	5	–	Tripping voltage: 70 to 35% of coil rated voltage Closing voltage: 85% to 110% of coil rated voltage
	200-240V AC	5	–	
	277V AC	5	–	
	380-415V AC	5	–	
	440-480V AC	5	–	
	24V DC	–	5	
	48V DC	–	5	
	125V DC	–	5	
BW9R□G0	110-130V AC	200	–	
	200-240V AC	150	–	
	277V AC	150	–	
	380-415V AC	200	–	
	440-480V AC	200	–	
	24V DC	–	150	
	48V DC	–	150	
	125V DC	–	300	

■ Operating handle

N type handle

The structure is that the handle operating mechanism is installed on the MCCB body.
Attaching the dustproof packing ensures the degree of protection IP50 stipulated by IEC60529.
Conforms to isolation stipulated by IEC60947-1.

V type handle

The structure is that the handle operating mechanism is installed on the door surface.
The standard V type operating handle ensures the degree of protection IP54 stipulated by IEC60529.
The space between the operating handle and the MCCB can be adjusted by using the extension shaft.
The operating handle mechanism can interlock the switchboard door.
Conforms to isolation stipulated by IEC60947-1.

N type handle **V type handle**

■ Combination of MCCB and operating handle

Frame	MCCB type	N type handle	V type handle
100A	BW103E0 BW102S0, BW103S0	**BW9N0B0**	**BW9V0B0**
160A	BW162E0, BW163E0 BW162J0, BW163J0 BW162S0, BW163S0	**BZ-N40C**	**BZ6V40C**
250A	BW252E0, BW253E0 BW252J0, BW253J0 BW252S0, BW253S0	**BZ-N40C**	**BZ6V40C**

N type handle

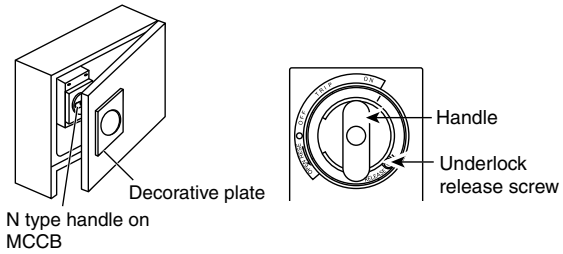

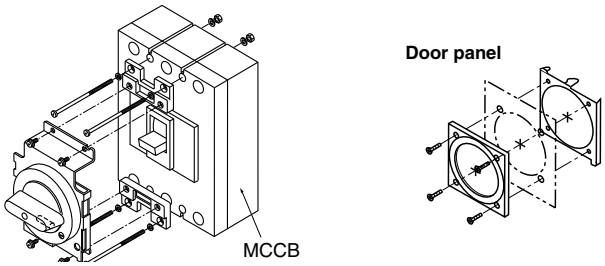

V type handle

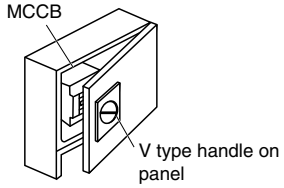

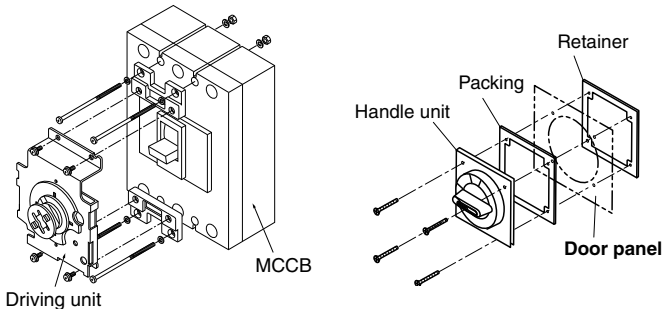

■ Operating method

- The ON, OFF, and RESET operation can be made for MCCB by rotating the handle. When the MCCB automatically interrupts the circuit, the handle indicates TRIP.
- By turning the RELEASE screw with a screwdriver, the door can be opened while the MCCB remained on.
- The handle can be locked OFF using a padlock. Use a commercially-available padlock. The shackle of the padlock should be max. ϕ5mm for BW9N0B0, max. ϕ8mm for BZ-N40C.

■ External accessories

• Terminal cover

Finger protection guards against shock from accidentally touching live terminals.

Long type

Short type

Frame	MCCB type		Long type	Short type	Packing quantity
100A	BW103E0	BW103S0	**BW9BTB0-L3**	**–**	2 pcs.
160A	BW162E0, BW163E0	BW162J0, BW163J0 BW162S0, BW163S0	**BZ-TB40B**	**BZ-TS40B**	
250A	BW252E0, BW253E0	BW252J0, BW253J0 BW252S0, BW253S0			

• Insulation barrier Interphase

The interphase barrier reinforces the insulation between terminals. Two insulation barriers are supplied with the MCCB body.
If additional insulation barriers are needed, please place an order with the following type number.

Frame	MCCB type		Type	Packing quantity
100A	BW103E0	BW102S0, BW103S0	**BW9BPB0**	2 pcs.
160A	BW162E0, BW163E0	BW162J0, BW163J0 BW162S0, BW163S0	**BZ-B40B**	4 pcs.
250A	BW252E0, BW253E0	BW252J0, BW253J0 BW252S0, BW253S0		

• Flat terminal

This terminal facilitates connecting work. Additional flat terminals can be attached to 160 to 250A frames. Attach flat terminals according to the screw size and tightening torque as shown in the table below.

Pole	MCCB type		Type	MCCB side		Flat terminal side		Packing quantity
				Screw size	Torque	Screw size	Torque	
2	BW162E0 BW252E0	BW162J0 BW162S0 BW252J0 BW252S0	**BZ-S50B-2252**	M8 × 20	8-13N•m	M8 × 25	8-10N•m	4 pcs.
3	BW163E0 BW253E0	BW163J0 BW163S0 BW253J0 BW253S0	**BZ-S50B-2253**	M8 × 20	8-13N•m	M8 × 25	8-10N•m	6 pcs.

• Block terminal

This connector screws directly to the standard connectors.

Frame	MCCB type		Rated current (A)	Wire size (mm^2)	Type	Packing quantity
100A		BW102S0	15 to 50	1.5 to 16	**BW9SSL0B0-052**	2 pcs.
			60 to 100	5.5 to 50	**BW9SSL0B0-102**	
	BW103E0	BW103S0	15 to 50	1.5 to 16	**BW9SSL0B0-053**	3 pcs.
			60 to 100	5.5 to 50	**BW9SSL0B0-103**	
160A	BW162E0, BW163E0	BW162J0, BW163J0 BW162S0, BW163S0	100 to 160	42.4 to 152	**BW9SSL0G0(*)**	
250A	BW252E0, BW253E0	BW252J0, BW253J0 BW252S0, BW253S0	175 to 250			

Note:(*) The Icu decreases to 50% when Block terminals are installed to the power supply side.

■ External accessories

• Handle locking device

This key lock device snaps on to the enable the handle to be locked in either the OFF position. It can be used either as a handle locking cover or, with the addition of a padlock, as an OFF lock.
Use a commercially-available padlock. The shackle of the padlock should 4 to 8mm diameter.

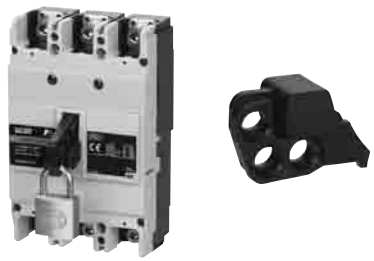

Frame	MCCB type		Type
100A	BW103E0	BW102S0, BW103S0	**BW9Q1B0**
160A	BW162E0, BW163E0	BW162J0, BW163J0 BW162S0, BW163S0	**BW9Q1G0**
250A	BW252E0, BW253E0	BW252J0, BW253J0 BW252S0, BW253S0	

• IEC 35mm rail mounting adapter

Unification of the external and basic dimensions has expanded the range of models mountable on IEC 35mm rails.

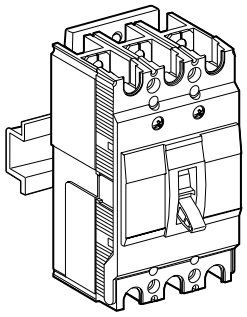

MCCB type		Type
BW103E0	BW102S0, BW103S0	**BW9PDB0**

06

H series
General information

H series

■ Description

- Models with high breaking capacities
- Line protection
  : 15 to 800A
  Motor protection
  : 16 to 45A
- Molded case color : Black

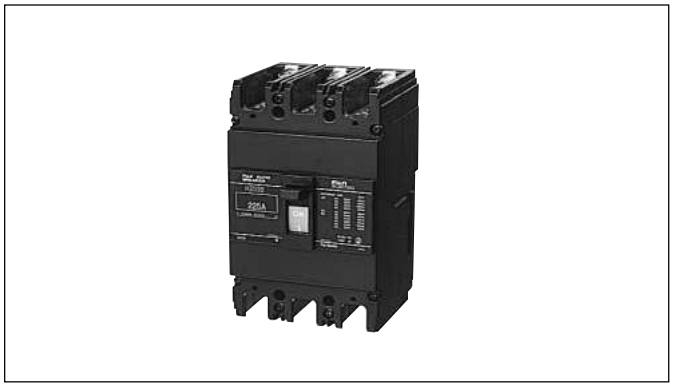

■ Type number nomenclature

H 5 2 BA □ / 50 E Q2 M W C

Series
H: H series

Frame size
5: 50AF
10: 100AF
20: 225AF
40: 400AF
60: 600AF
80: 800AF

Number of poles
2: 2-pole
3: 3-pole

Operating characteristics
Blank: For line protection
M: For motor protection

Enclosure
C: Steel enclosure
CV: Steel enclosure with V handle

Accessory
W: With auxiliary switch
K : With alarm switch
F : With shunt tripping device
R : With undervoltage tripping device
(Provided terminal block)

Operating device
Blank: Manual operation
M: Motor operating mechanism

Handle padlocking device
Q1: Cap type
Q2: Plate type

Mounting and connection
Blank: Front mounting, front connection
X: Front mounting, rear connection
(to either metal or insulating panel)
E: Flush mounting, rear connection
P: Plug-in mounting
D: Draw-out

Rated current
See page 06/117.

■ Ordering information

Specify the following:
1. Type number
2. Optional accessories
   Lead wire or terminal block connection
3. When ordering MCCB with shunt tripping device, undervoltage tripping device or motor operating mechanism, specify rated voltage and frequency.
4. Handle type if required

■ H series/2, 3-pole

Frame			50A		100A		
Pole			2	3	2	3	3
Type	*Page 06/110*		**H52BA**	**H53BA**	**H102BA**	**H103BA**	**H103R**
Rated current (A)			15, 20, 30 40, 50		15, 20, 30, 40 50, 60, 75, 100		40, 50, 60 75, 100
Rated insulation voltage Ui (Volts)		AC	690		690		660
		DC	250		250		250
Rated breaking capacity (kA)	IEC 60947-2 [Icu/Ics]*	600V AC	25/7		25/7		—
	JIS C8201-2-1	500V AC	35/9		35/9		42
	Ann.2 [Icu]	440V AC	65/17		65/17		85
		415V AC	65/17		65/17		85
		400V AC	65/17		65/17		85
		380V AC	65/17		65/17		100
		230V AC	125/32		125/32		125
		250V DC	40/10		40/10		40
Dimensions (mm) *Page 06/118*	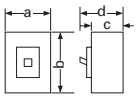	a	90		90		105
		b	155		155		165
		c	60		60		99
		d	82		82		127
Mass (kg)	Front mounting type		1.1	1.2	1.1	1.2	2.3
Tripping device			Thermal-magnetic		Thermal-magnetic		Thermal-magnetic
Trip button			Provided		Provided		Provided
Front mounting,	front connection	No-mark	●		●		●
	rear connection	X	●		●		●
Flush mounting,	rear connection	E	●		●		●
	top & bottom connection	Y	—		—		—
Plug-in mounting		P	●		●		●
Draw-out		D	—		—		—
Internal accessories	*Page 06/126*						
Alarm switch		K	BZ-K35B□		BZ-K35B□		BZ-K50B□
Auxiliary switch		W	BZ-W35B□		BZ-W35B□		BZ-W50B□
Undervoltage trip		R	BZ-R35BT		BZ-R35BT		BZ-R50BT
Shunt trip		F	BZ-F35BT		BZ-F35BT		BZ-F50BT
External accessories	*Page 06/125*						
Motor operating mechanism		M	▲		▲		▲
Padlocking device		Q	▲		▲		▲
Mechanical interlocking device		M1	BZ-M130C-3		BZ-M130C-3		BZ-M140C
Operating handle	N type	N	BZ-N30C		BZ-N30C		BZ-N50C
Operating handle	V type	V	BZ-V30C		BZ-V30C		BZ-V50C
Steel enclosure		C	BZ-C30B-3		BZ-C30B-3		BZ-C50B
Steel enclosure with V type handle		CV	BZ-CV30C		BZ-CV30C		—
Terminal cover	Short	TS	BZ-TS30B-3		BZ-TS30B-3		BZ-TS50B
Terminal cover	Long	TB	BZ-TB30B-3		BZ-TB30B-3		BZ-TB50B
Insulation barrier	Interphase	B	BZ-B30B		BZ-B30B		BZ-B50B
Insulation barrier	Earth	BL	BZ-BL35B		BZ-BL35B		BZ-BL50B

● Available — Not available ▲ Factory-mounted accessory

Notes: • The breaking capacity for the 240V, 380V and 415V circuits are equivalent to that of 230V, 400V and 440V, resprctively.
• Interphase insulation barriers are standard provided for the front mounting type breakers.
* H103R do not conform to IEC 60947-2.

■ H series/2, 3-pole

Frame		225A			400A
Pole		2	3	3	3
Type *Page 06/110*		**H202BA**	**H203BA**	**H203R**	**H403R**
Rated current (A)		125, 150, 175 200, 225		125, 150, 175 200, 225	250, 300 350, 400
Rated insulation voltage Ui (Volts)	AC	690		660	690
	DC	250		250	250
Rated breaking capacity (kA)	IEC 60947-2 [Icu/Ics]* 600V AC	25/7		—	—
	JIS C8201-2-1 500V AC	35/9		42	85
	Ann.2 [Icu] 440V AC	65/17		85	125
	415V AC	65/17		85	125
	400V AC	65/17		85	125
	380V AC	65/17		100	125
	230V AC	125/32		125	125
	250V DC	40/10		40	40
Dimensions (mm) *Page 06/120*	a	105		105	140
	b	165		165	257
	c	60		99	103
	d	84		127	146
Mass (kg)	Front mounting type	1.1	1.3	2.3	5
Tripping device		Thermal-magnetic			Thermal-magnetic
Trip button		Provided			Provided
Front mounting, front connection	No-mark	●		●	●
rear connection	X	●		●	●
Flush mounting, rear connection	E	●		●	●
top & bottom connection	Y	—		—	—
Plug-in mounting	P	●		●	●
Draw-out	D	—		—	—
Internal accessories *Page 06/126*					
Alarm switch	K	BZ-K40B□		BZ-K40B□	BZ-K70B□
Auxiliary switch	W	BZ-W40B□		BZ-W40B□	BZ-W70B□
Undervoltage trip	R	BZ-R40BT		BZ-R40BT	BZ-R70BT
Shunt trip	F	BZ-F40BT		BZ-F40BT	BZ-F70BT
External accessories *Page 06/125*					
Motor operating mechanism	M	▲		▲	▲
Padlocking device	Q	▲		▲	▲
Mechanical interlocking device	M1	BZ-M140C		BZ-M140C	BZ-M160C
Operating handle N type	N	BZ-N40C		BZ-N50C	BZ-N60C
Operating handle V type	V	BZ-V40C		BZ-V50C	BZ-V60C
Steel enclosure	C	BZ-C40B		BZ-C50B	BZ-C60B
Steel enclosure with V type handle	CV	—		—	BZ-CV60B
Terminal cover Short	TS	BZ-TS40B		BZ-TS50B	—
Terminal cover Long	TB	BZ-TB40B		BZ-TB50B	BZ-TB60B
Insulation barrier Interphase	B	BZ-B40B		BZ-B50B	B-43A
Insulation barrier Earth	BL	BZ-BL40B		BZ-BL50B	—

● Available — Not available ▲ Factory-mounted accessory

Notes: • The breaking capacity for the 240V, 380V and 415V circuits are equivalent to that of 230V, 400V and 440V, resprctively.
• Interphase insulation barriers are standard provided for the front mounting type breakers.
* H203R, H403R do not conform to IEC 60947-2.

■ H series/3-pole

Frame			600A	800A
Pole			3	3
Type *Page 06/110*			**H603R**	**H803R**
Rated current (A)			500, 600	700, 800
Rated insulation voltage Ui (Volts)		AC	690	690
		DC	250	250
Rated breaking capacity (kA)	IEC 60947-2 [Icu/Ics]*	600V AC	—	—
	JIS C8201-2-1	500V AC	85	85
	Ann.2 [Icu]	440V AC	125	125
		415V AC	125	125
		400V AC	125	125
		380V AC	125	125
		230V AC	125	125
		250V DC	40	40
Dimensions (mm) *Page 06/119*	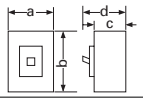	a	210	210
		b	275	275
		c	103	103
		d	146	146
Mass (kg)	Front mounting type		9	10
Tripping device			Thermal-magnetic	Thermal-magnetic
Trip button			Provided	Provided
Front mounting,	front connection	No-mark	●	●
	rear connection	X	●	●
Flush mounting,	rear connection	E	●	●
	top & bottom connection	Y	—	—
Plug-in mounting		P	●	●
Draw-out		D	●	●
Internal accessories *Page 06/126*				
Alarm switch		K	BZ-K70B□	BZ-K70B□
Auxiliary switch		W	BZ-W70B□	BZ-W70B□
Undervoltage trip		R	BZ-R70BT	BZ-R70BT
Shunt trip		F	BZ-F70BT	BZ-F70BT
External accessories *Page 06/125*				
Motor operating mechanism		M	▲	▲
Padlocking device		Q	▲	▲
Mechanical interlocking device		M1	BZ-M170C	BZ-M170C
Operating handle	N type	N	BZ-N70C	BZ-N70C
Operating handle	V type	V	BZ-V70C	BZ-V70C
Steel enclosure		C	BZ-70B	BZ-70B
Steel enclosure with V type handle		CV	BZ-CV70C	BZ-CV70C
Terminal cover	Short	TS	—	—
Terminal cover	Long	TB	BZ-TB70B	BZ-TB70B
Insulation barrier	Interphase	B	B-43A	B-43A
Insulation barrier	Earth	BL	—	—

Notes: • Interphase insulation barriers are standard provided for the front mounting type breakers. ● Available — Not available ▲ Factory-mounted accessory
* H603R, H803R do not conform to IEC 60947-2.

06

■ H series/3-pole (Motor protection)

Frame		50A
Pole		3
Type *Page 06/110*		**H53BAM**
Rated current (A) *1		16, 24, 32, 40, 45
Rated insulation voltage Ui (Volts)	AC	660
	DC	—
Rated breaking capacity (kA) — IEC 60947-2 [Icu/Ics]*2	600V AC	35/9
JIS C8201-2-1	500V AC	42/11
Ann.2 [Icu]	440V AC	65/17
	415V AC	65/17
	400V AC	65/17
	380V AC	65/17
	230V AC	125/32
Dimensions (mm) *Page 06/118* 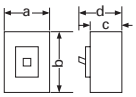	a	90
	b	155
	c	60
	d	82
Mass (kg)	Front mounting type	1.4
Tripping device		Thermal-magnetic
Trip button		
Front mounting, front connection	No-mark	●
rear connection	X	●
Flush mounting, rear connection	E	●
top & bottom connection	Y	—
Plug-in mounting	P	●
Draw-out	D	—
Internal accessories *Page 06/126*		
Alarm switch	K	BZ-K35B□
Auxiliary switch	W	BZ-W35B□
Undervoltage trip	R	BZ-R35BT□
Shunt trip	F	BZ-F35BT□
External accessories *Page 06/125*		
Motor operating mechanism	M	▲
Padlocking device	Q	▲
Mechanical interlocking device	M1	BZ-M130C-3
Operating handle N type	N	BZ-N30C
Operating handle V type	V	BZ-V30C
Steel enclosure	C	BZ-C30B-3
Steel enclosure with V type handle	CV	BZ-CV30C
Terminal cover Short	TS	BZ-TS30B-3
Terminal cover Long	TB	BZ-TB30B-3
Insulation barrier Interphase	B	BZ-B30B
Insulation barrier Earth	BL	BZ-BL35B

Notes: *1 For further information related to motor capacity, see page 06/117.

● Available — Not available ▲ Factory-mounted accessory

■ Mounting modifications

Standard type FUJI breakers are front mounting with front connections. The standard breaker can easily be modified to become front mounting rear connection type, flush mounting type and plug-in type. The additional parts such as insulation bases, barriers, covers and similar parts are added as required.

Standard type
Front mounting
Front connection

BASIC DESIGN

Mounting modification kits:
See page 06/145

Additional main parts	Front mounting Rear connection (X type)
Bar stud terminal 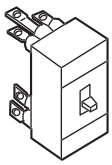	H50BA H100BA H100R H225BA H225R H400R H600R H800R Each stud can be turned by 90°

Additional main parts	Flush mounting Rear connection (E type)
Bar stud terminal 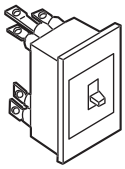	H50BA H100BA H100R H225BA H225R H400R H600R H800R Each stud can be turned by 90°

Additional main parts	Plug-in mounting (P type)
Round stud terminal 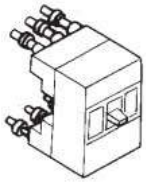	H50BA H100BA
Bar stud terminal 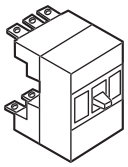	H100R H400R H225BA H600R H225R H800R Each stud can be turned by 90°

■ Terminal connection/Front mounting, front connection

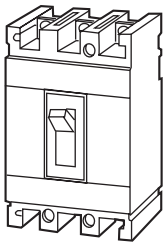

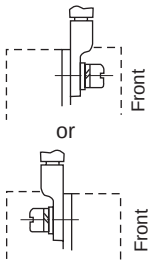

Flat terminal

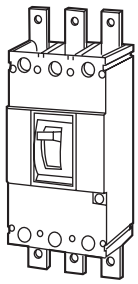

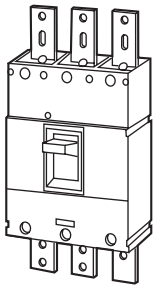

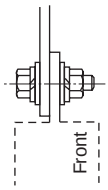

Flat terminal

Self lifting screw	Breaker type	Size
Pan-head screw	H50BA H100BA	M8×14
Hexagonal socket head bolt	H100R H225BA H225R	M8×20

Hexagonal head bolt	Breaker type	Size
	H400R	M12×35
	H600R H800R	M12×40

H series
Wire size and terminal

■ Wire size and crimp terminal

The following is the size recommendations for crimp terminals.

Crimp terminal		
	R :	JIS C2805
	CB :	JEM-1399
	JST :	Product of Japan Crimp Terminal Co., Ltd.
	F :	FUJI special crimp terminal

Ampere frame	Breaker	Wire size(mm²)										
		1.04 | 2.63	2.63 | 6.64	6.64 | 10.52	10.52 | 16.78	16.78 | 26.66	26.66 | 42.42	42.42 | 60.57	96.3 | 117.2	117.2 | 152.05	192.6 | 242.27	242.27 | 325
50	H50BA	R2-8	R5.5-8	R8-8	R14-8	JST22-S8						
100	H100BA, H100R	R2-8	R5.5-8	R8-8	R14-8	R22-8	JST38-S8	CB60-8				
225	H225BA, H225R				R14-8	R22-8	R38-8	R60-8	CB100-8	CB150-8		
400	H400R						R38-12	R60-12	R100-12	R150-12	R200-12	JST325-12 *1
600	H600R								R100-12	R150-12	R200-12	JST325-12
800	H800R								R100-12	R150-12	R200-12	JST325-12

Note: For solid-state trip types, same as the standard types.

*1 When this crimp terminal is used, the terminal cover cannot be mounted.

■ Breaker termination

MCCB type	Front connection	Rear connection **X**	Flush mounting **E**	Plug-in mounting **P**
H50BA H100BA	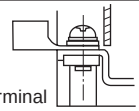 Flat terminal	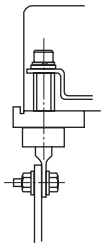	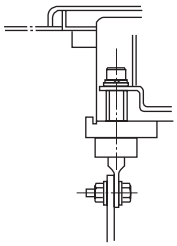	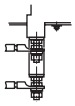
H100R H225BA H225R	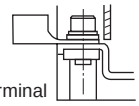 Flat terminal			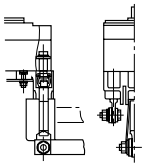 90° rotational stud
H400R H600R H800R	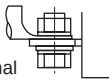 Flat terminal			

■ H series, 2-pole / Line protection

Breaker ampere frame	Rated current (A)	Type	☐ : Available mounting and connection
50	15	**H52BA/15☐**	Blank, X, E, P
	20	**H52BA/20☐**	
	30	**H52BA/30☐**	
	40	**H52BA/40☐**	
	50	**H52BA/50☐**	
100	15	**H102BA/15☐**	Blank, X, E, P
	20	**H102BA/20☐**	
	30	**H102BA/30☐**	
	40	**H102BA/40☐**	
	50	**H102BA/50☐**	
	60	**H102BA/60☐**	
	75	**H102BA/75☐**	
	100	**H102BA/100☐**	
225	125	**H202BA/125☐**	Blank, X, E, P
	150	**H202BA/150☐**	
	175	**H202BA/175☐**	
	200	**H202BA/200☐**	
	225	**H202BA/225☐**	

■ H series, 3-pole / Line protection

Breaker ampere frame	Rated current (A)	Type	☐ : Available mounting and connection
50	15	**H53BA/15☐**	Blank, X, E, P
	20	**H53BA/20☐**	
	30	**H53BA/30☐**	
	40	**H53BA/40☐**	
	50	**H53BA/50☐**	
100	15	**H103BA/15☐**	Blank, X, E, P
	20	**H103BA/20☐**	
	30	**H103BA/30☐**	
	40	**H103BA/40☐**	
	50	**H103BA/50☐**	
	60	**H103BA/60☐**	
	75	**H103BA/75☐**	
	100	**H103BA/100☐**	
	40	**H103R/40☐**	Blank, X, E, P
	50	**H103R/50☐**	
	60	**H103R/60☐**	
	75	**H103R/75☐**	
	100	**H103R/100☐**	
225	125	**H203BA/125☐**	Blank, X, E, P
	150	**H203BA/150☐**	
	175	**H203BA/175☐**	
	200	**H203BA/200☐**	
	225	**H203BA/225☐**	
	125	**H203R/125☐**	Blank, X, E, P
	150	**H203R/150☐**	
	175	**H203R/175☐**	
	200	**H203R/200☐**	
	225	**H203R/225☐**	
400	250	**H403R/250☐**	Blank, X, E, P
	300	**H403R/300☐**	
	350	**H403R/350☐**	
	400	**H403R/400☐**	
600	500	**H603R/500☐**	Blank, X, E, P, D
	600	**H603R/600☐**	
800	700	**H803R/700☐**	Blank, X, E, P, D
	800	**H803R/800☐**	

■ H series, 3-pole / Motor protection

Breaker ampere frame	Motor capacity (kW) 200/220V	Motor capacity (kW) 400/440V	Rated current (A)	Type	☐ : Available mounting and connection
50	3.7	7.5	16	**H53BAM/16☐**	Blank, X, E, P
	5.5	11	24	**H53BAM/24☐**	
	7.5	15	32	**H53BAM/32☐**	
	—	18.5	40	**H53BAM/40☐**	
	11	22	45	**H53BAM/45☐**	

06

■ Dimensions, mm

● Front mounting, front connection

H52BA, H53BA, H102BA, H103BA

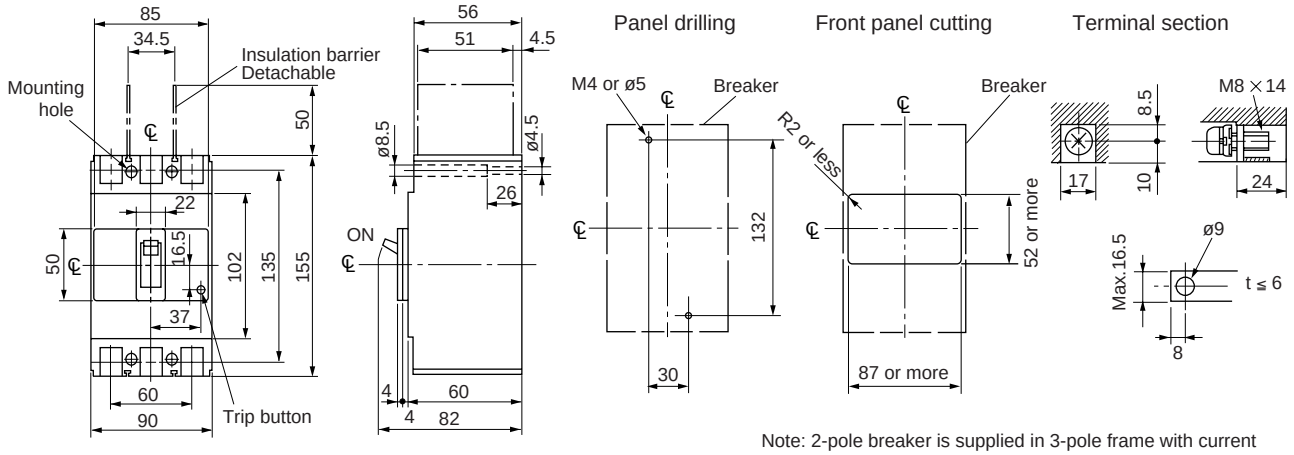

Note: 2-pole breaker is supplied in 3-pole frame with current carrying parts omitted from center pole.

H202BA, H203BA

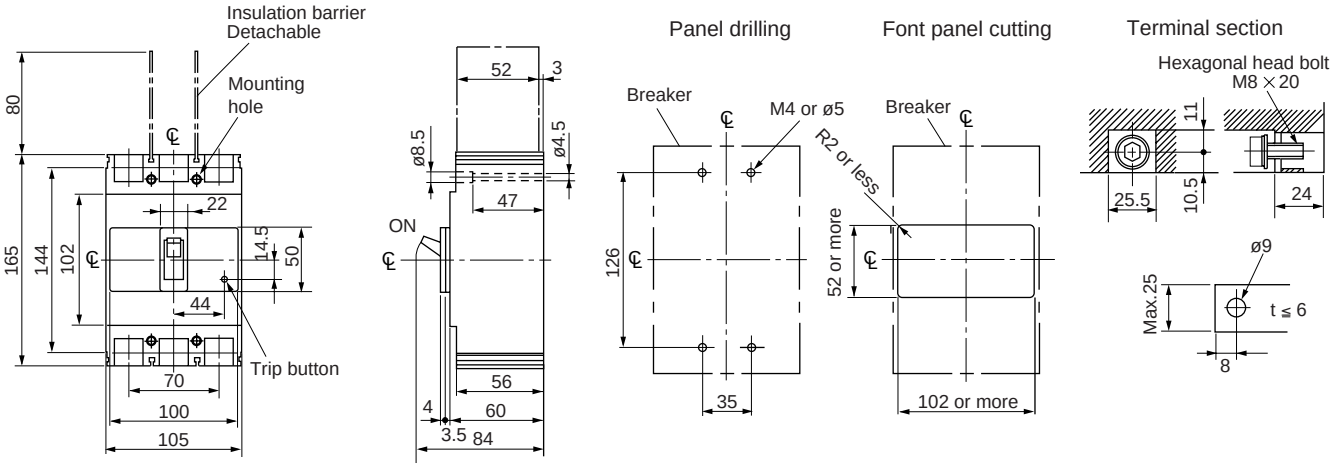

Note: 2-pole breaker is supplied in 3-pole frame with current carrying parts omitted from center pole.

■ Dimensions, mm

● Front mounting, front connection

H103R, H203R

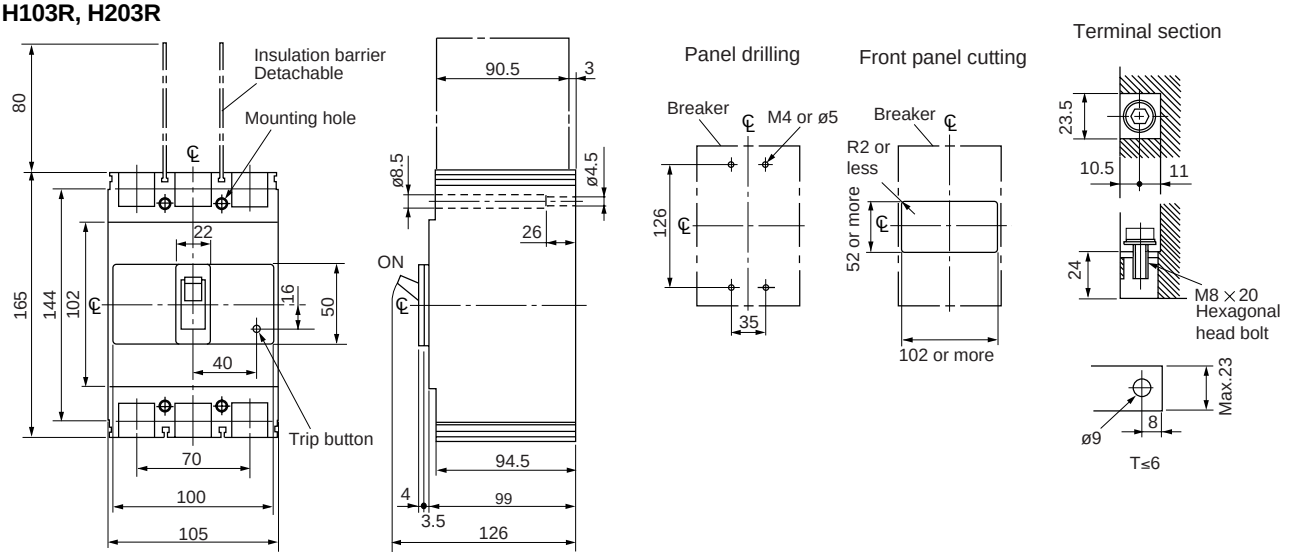

H403R

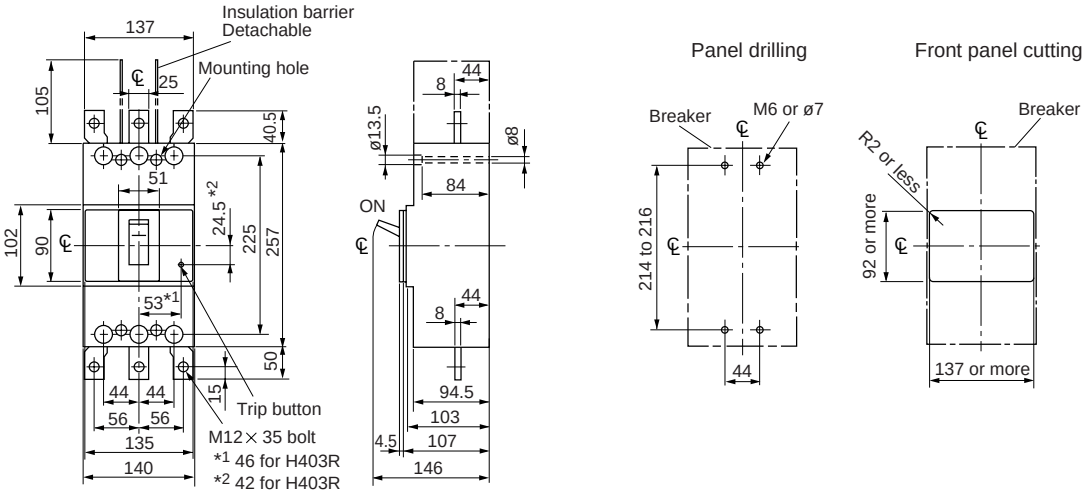

H603R

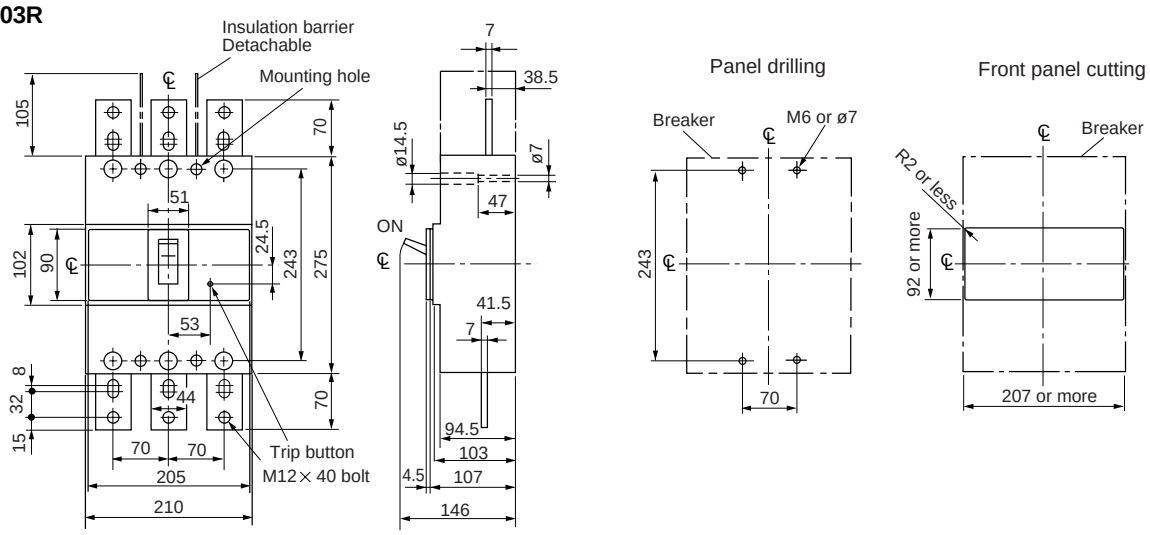

H series
Dimensions

■ Dimensions, mm

● Front mounting, front connection

H803R

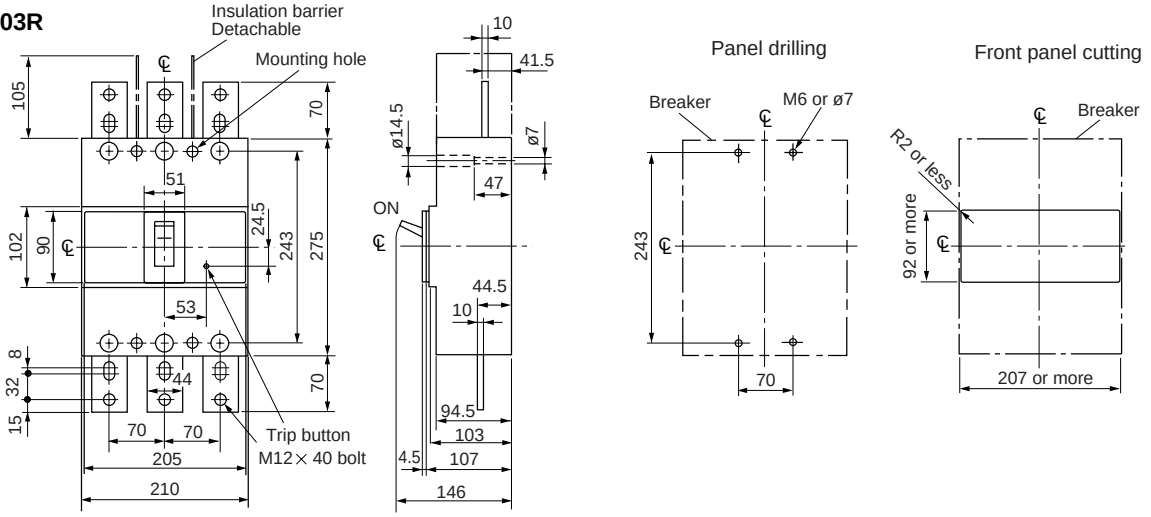

● Front mounting, rear connection (type X)

H52BA, H53BA, H102BA, H103BA

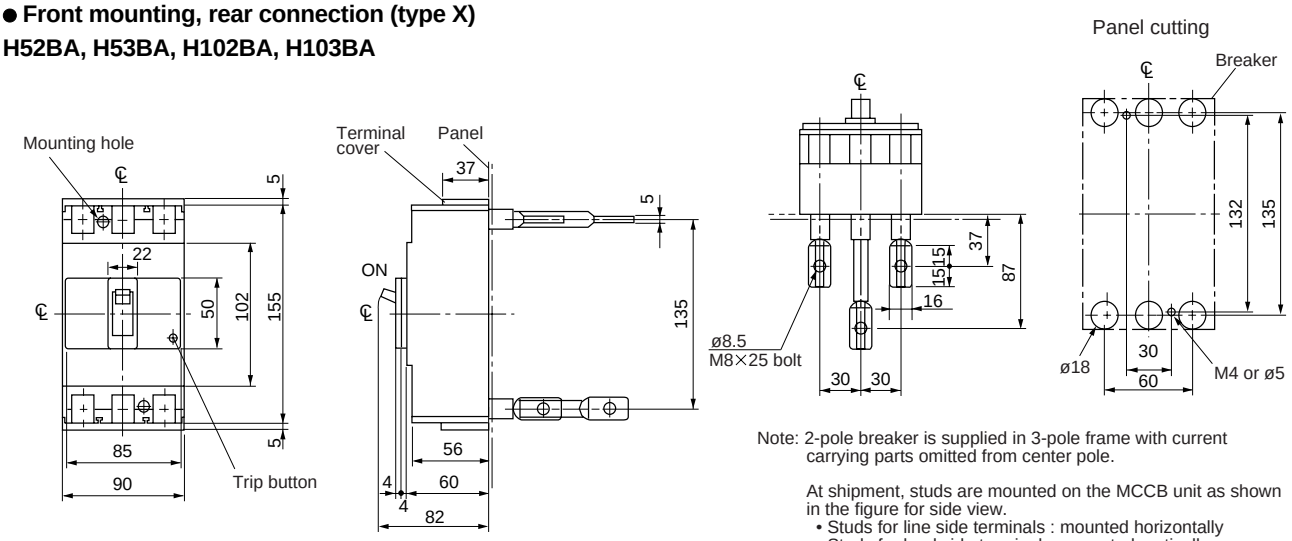

Note: 2-pole breaker is supplied in 3-pole frame with current carrying parts omitted from center pole.

At shipment, studs are mounted on the MCCB unit as shown in the figure for side view.
- Studs for line side terminals : mounted horizontally
- Studs for load side terminals : mounted vertically

Each stud can be mounted both horizontally or vertically.

H202BA, H203BA

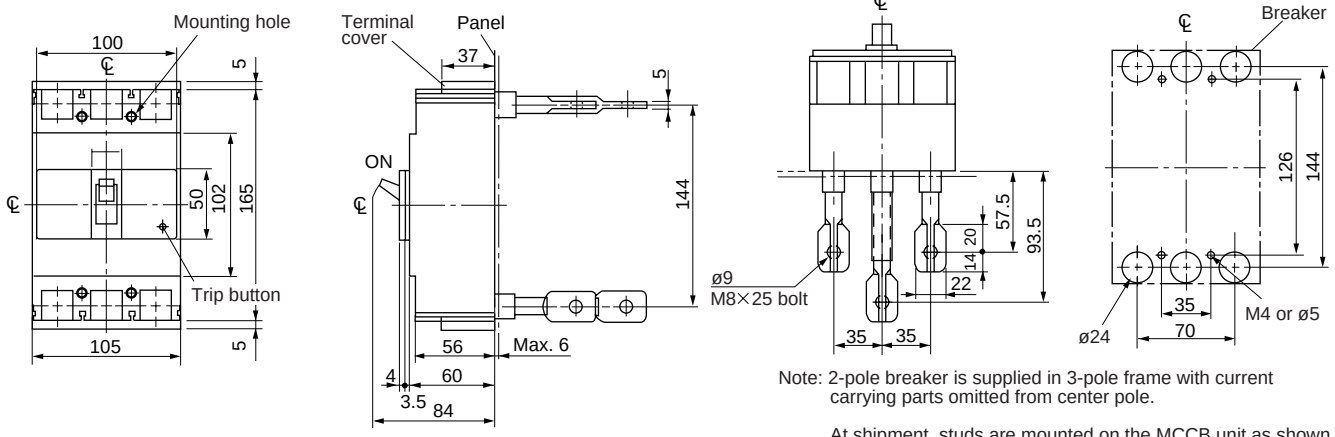

Note: 2-pole breaker is supplied in 3-pole frame with current carrying parts omitted from center pole.

At shipment, studs are mounted on the MCCB unit as shown in the figure for side view.
- Studs for line side terminals : mounted horizontally
- Studs for load side terminals : mounted vertically

Each stud can be mounted both horizontally or vertically.

■ Dimensions, mm

● Front mounting, rear connection (type X)

H103R, H203R

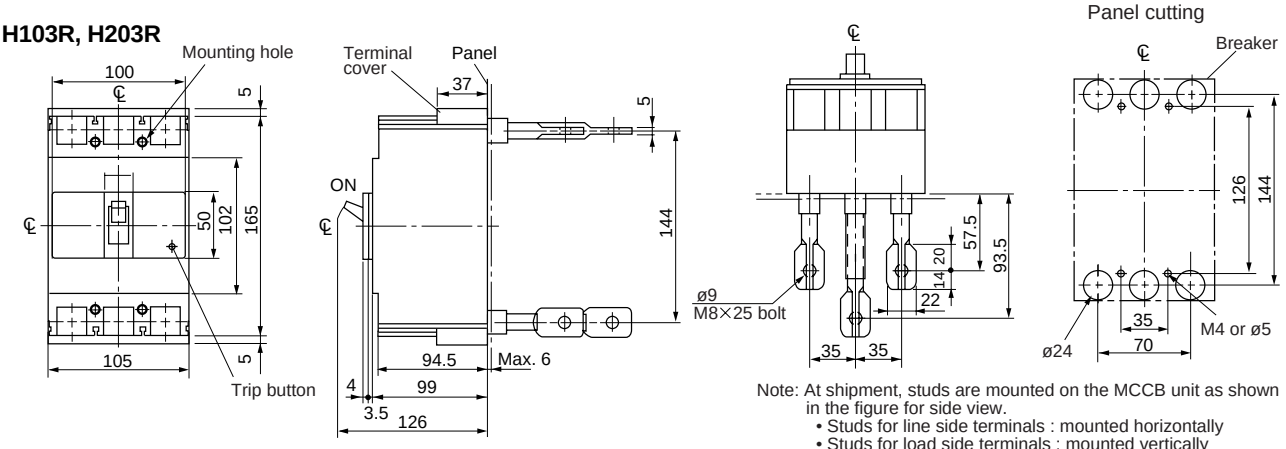

Note: At shipment, studs are mounted on the MCCB unit as shown in the figure for side view.
- Studs for line side terminals : mounted horizontally
- Studs for load side terminals : mounted vertically

Each stud can be mounted both horizontally or vertically.

H403R

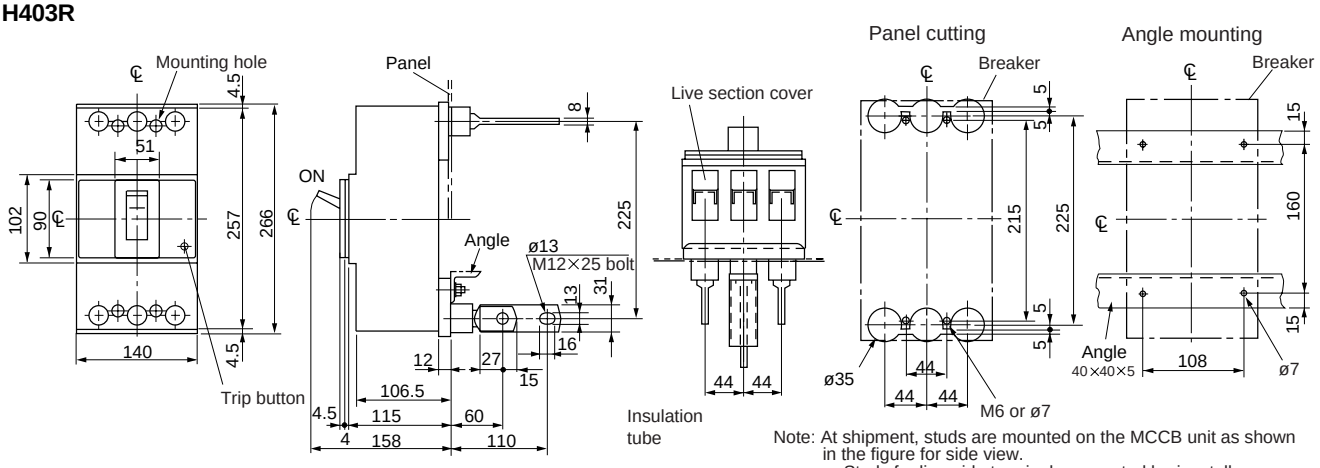

Note: At shipment, studs are mounted on the MCCB unit as shown in the figure for side view.
- Studs for line-side terminals : mounted horizontally
- Studs for load-side terminals : mounted vertically

Each stud can be mounted both horizontally or vertically.

H603R

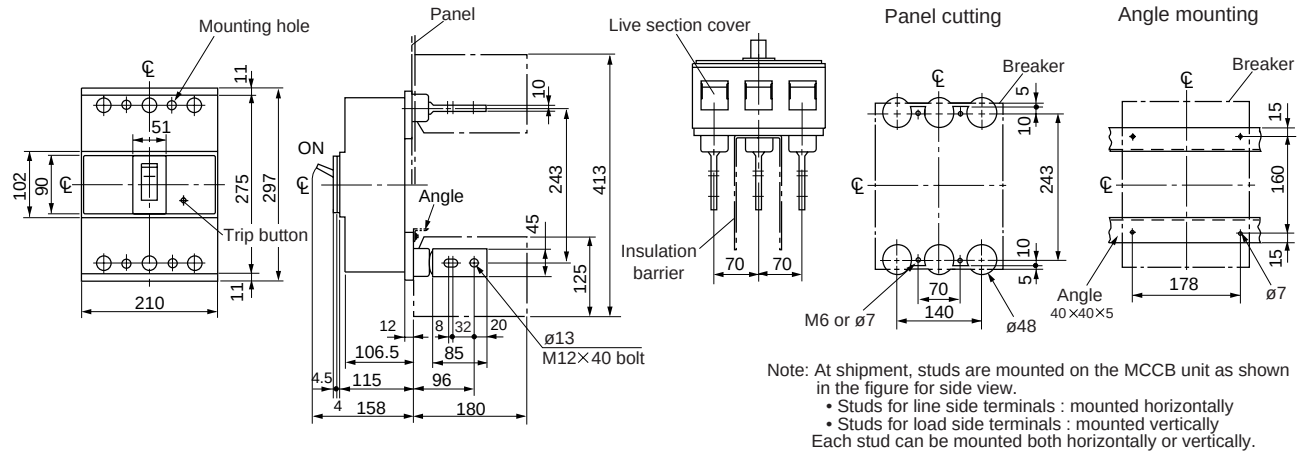

Note: At shipment, studs are mounted on the MCCB unit as shown in the figure for side view.
- Studs for line side terminals : mounted horizontally
- Studs for load side terminals : mounted vertically

Each stud can be mounted both horizontally or vertically.

■ Dimensions, mm

● Front mounting, rear connection (type X)

H803R

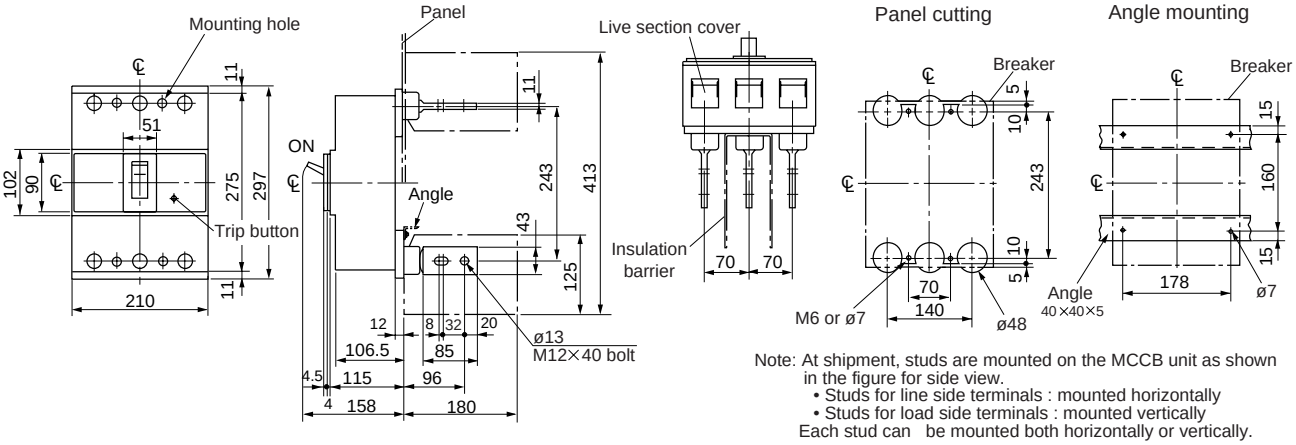

Note: At shipment, studs are mounted on the MCCB unit as shown in the figure for side view.
- Studs for line side terminals : mounted horizontally
- Studs for load side terminals : mounted vertically

Each stud can be mounted both horizontally or vertically.

Dimensions for reference only. Confirm before construction begins.

Line protection

■ H series, 2, 3-pole
H52BA, H53BA, H102BA, H103BA

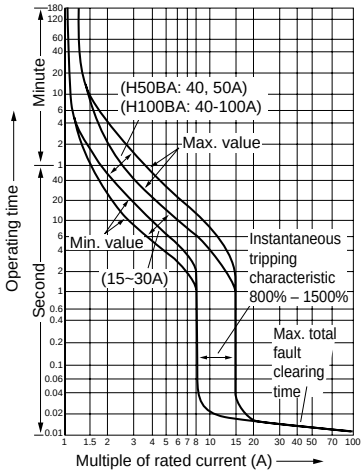

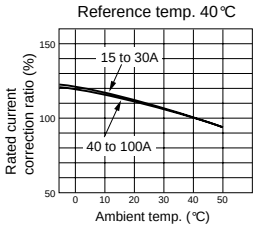

■ H series, 2, 3-pole
H403R

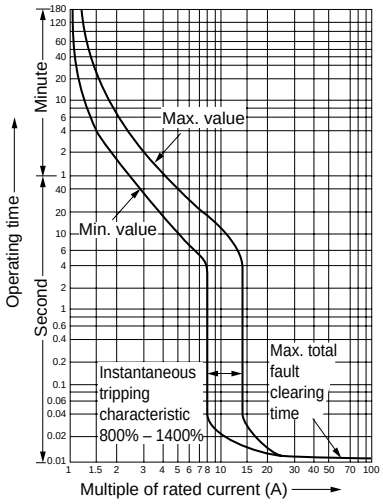

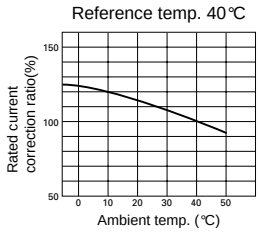

H103R

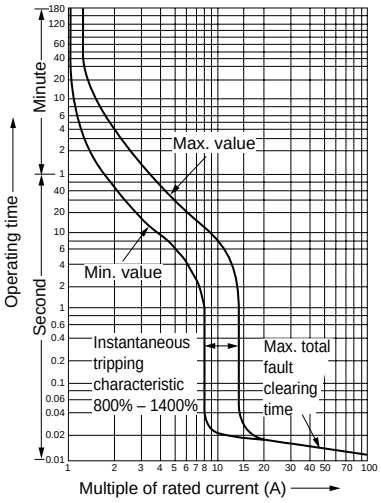

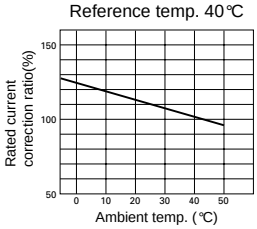

H603R

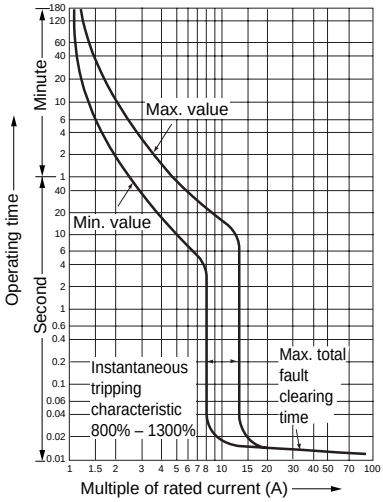

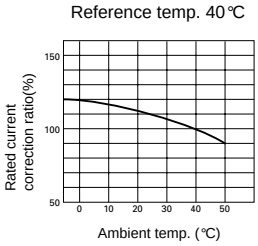

H202BA, H203BA, H203R

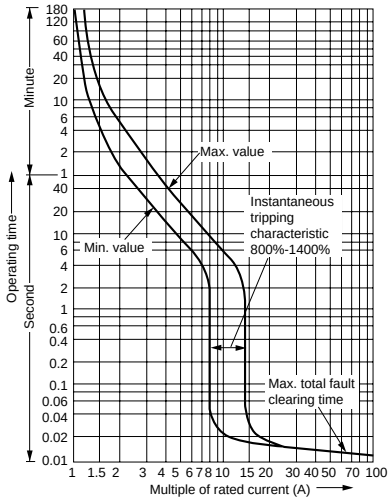

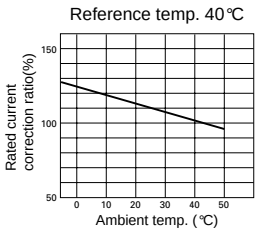

Line protection

■ H series, 3-pole

H800R

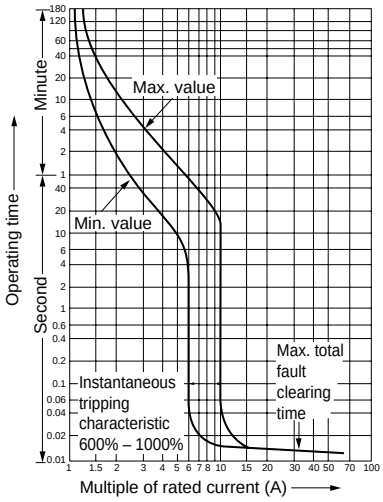

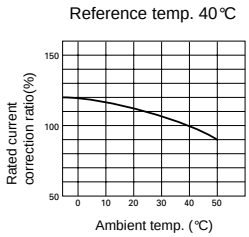

Motor protection

■ H series

H50BAM

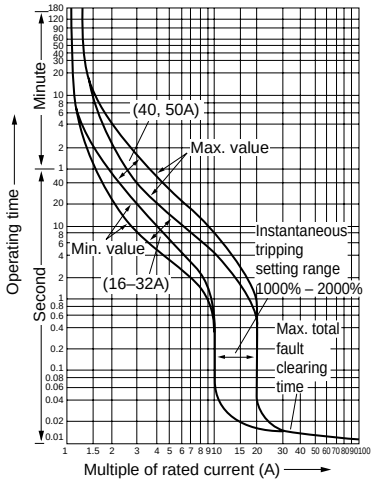

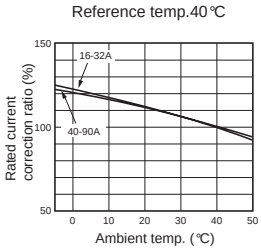

Variation of external accessory

Insulation barriers

The interphase barrier reinforces the insulation between terminals, while the earth barrier increases the insulation between the terminal and the mounting panel.
See page 06/143

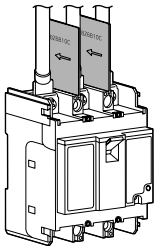

Interface barrier

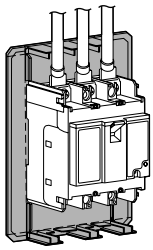

Earth barrier

Mechanical interlock device

The mechanical interlock device can be mounted onto two separate breakers to maintain a mutual ON or OFF condition. The device can also be locked with a padlock.
See page 06/132

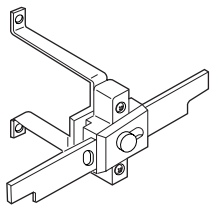

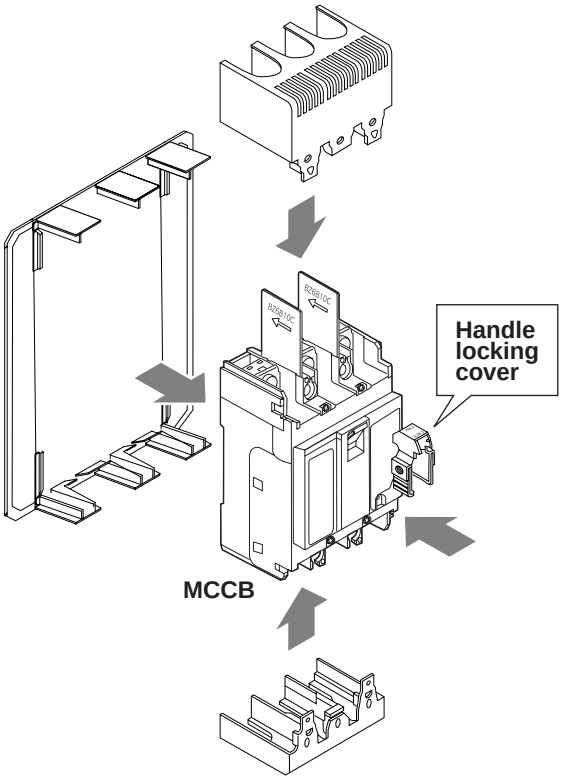

External operating handles

There are two handles available in the series: the V type handle on panel mount and the N type handle on breaker mount. An extension shaft (sold separately) for the V type handle allows the distance between the handle and the breaker to be adjusted. The protective structure of the V type handle operation section conforms to IP54. Both handle types can be locked with a padlock conforming to IEC 60204-1. The panel cutout dimensions are the same for both handles.
See page 06/133

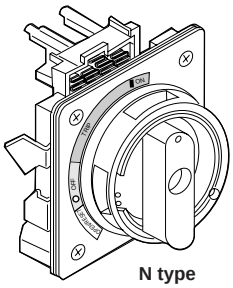

N type

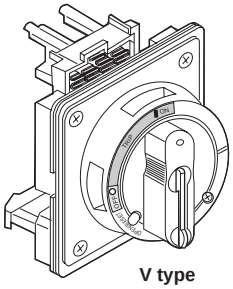

V type

Terminal covers

Finger protection guards against shock from accidentally touching live terminals.
Two types of terminal covers are available–long type and short type.
See page 06/143

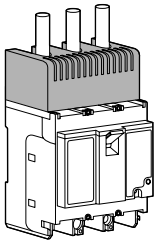

Long type

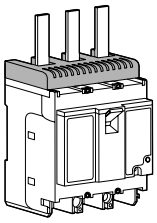

Short type

Steel enclosures

Enclosures are available in three types–two with V-type handle which allows the operation from the outside, and other direct operating.
See page 06/141

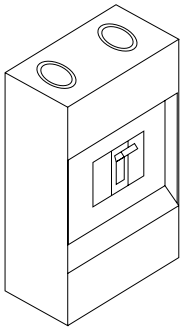

Terminal blocks for auxiliary circuit

- It indicates the terminal No. of internal accessory.The connection method of internal accessory is lead-wire system and terminal block system.
- Specify the connection method when ordering. It is lead-wire system unless specified.
- The lead wires are pulled out and terminal blocks are attached on the same side of the internal accessory will be attached
- For the available configuration of internal accessory, *see page 06/127.*

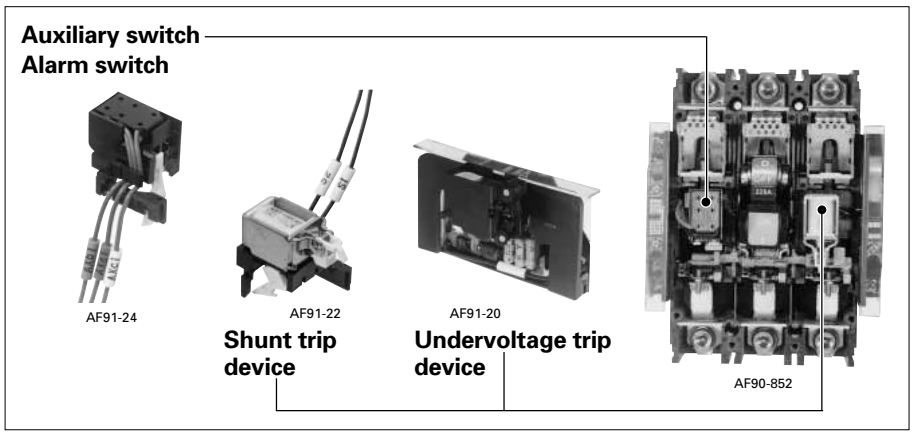

Accessory		Terminal number H100R, H225R, H400R, H600R, H800R H50BA, H100BA, H225BA
Auxiliary switch	SPDT: W	11 AXc1, 12 AXb1, 14 AXa1
	2PDT: W2	11 AXc1, 12 AXb1, 14 AXa1; 21 AXc2, 22 AXb2, 24 AXa2
Alarm switch	SPDT: K	91 ALc1, 92 ALb1, 94 ALa1
	2PDT: K2	91 ALc1, 92 ALb1, 94 ALa1; 01 ALc2, 02 ALb2, 04 ALa2
Shunt trip device : F	With 1NO contact to prevent coil burn-out	C2 S2, C1 S1
	Continuous rating	C2 S2, C1 S1
Undervoltage trip device : R		U<; D2 P2, D1 P1

■ Available configurations

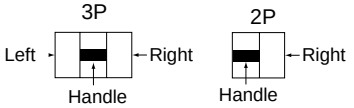

Undervoltage trip: R Shunt trip: F ○ Auxiliary switch: W ● Alarm switch: K

← Lead wire

MCCB	H series	**H103R** **H203R** **H52BA** **H53BA** **H102BA** **H103BA** **H202BA** **H203BA**	**H403R** **H603R** **H803R** *2	
Pole		2, 3	2, 3	
Auxiliary switch SPDT W				
Alarm switch SPDT K				
Shunt trip F				
Undervoltage trip R		*1		
W2				
W+K				
W2+K				
K2				
W+K2				
W2+K2				
W+F				
W2+F				
W+R		*1		
W2+R				
K+F				
K+R		*1		
W+K+F				
W+K+R		*1		
K2+F				
K2+R				
W2+K+F				
W2+K+R				
W+K2+F				
W+K2+R				
W2+K2+F				
W2+K2+R				

Notes: • The lead wires are pulled out and terminal blocks are attached on the same side of the accessory.attached.
*1 The side on which the undervoltage trip device "R" is mounted has the terminal block.
*2 H400R, H600R, H800R: Factory-mounted

■ Operation of auxiliary switches(W) and alarm switches(K)

Accessory	Handle position		
	ON	OFF	Trip
Auxiliary switch SPDT: **W**	11/AXcL — 14/AXaL 12/AXbL	11/AXcL — 14/AXaL 12/AXbL	
2PDT: **W2**	11/AXcL — 14/AXaL 12/AXbL 21/AXcR — 24/AXaR 22/AXbR	11/AXcL — 14/AXaL 12/AXbL 21/AXcR — 24/AXaR 22/AXbR	
Alarm switch SPDT: **K**	91/ALcL — 94/ALaL 92/ALbL		91/ALcL — 94/ALaL 92/ALbL
2PDT: **K2**	91/ALcL — 94/ALaL 92/ALbL 01/ALcR — 04/ALaR 02/ALbR		91/ALcL — 94ALaL 92/ALbL 01/ALcR — 04/ALaR 02/ALbR

Note: ▭ Ring mark indication

■ Ratings of auxiliary switches(W) and alarm switches(K)

● Standard type

Applicable breaker type	Rated operating current (A) IEC60947-5-1, JIS C8201-5-1				Minimum load current
H series	AC		DC		
	Voltage (V)	AC15 Ind. load	Voltage (V)	DC14 Ind. load	
H50BA	125	2	125	0.5	5V DC 160mA
H100BA, H100R H225BA, H225R H400R H600R H800R	250	1	250	0.2	30V DC 30mA

● Low level circuit

Applicable breaker type	DC		Minimum load current
H series	Voltage (V)	Make/break current (A)	
H50BA	30	0.1	5V DC 1mA
H100BA, H100R H225BA, H225R H400R H600R H800R			30V DC 1mA

■ Rating of shunt trip (F)

MCCB type	Power consumption				Time rating of coil	Operating time (ms)
H series	AC		DC			
	V	VA	V	W		
H50BA	24 (50/60Hz)	30	24	35	Continuous (With 1NO contact to prevent coil burn-out)	7-21
H100BA	48 (50/60Hz)		48			
H100R	100-125 (50/60Hz)		100-110			
H225BA	200-240 (50/60Hz)		200-220			
H225R	380-450 (50/60Hz)		–			
	440-480 (50/60Hz)		–			
H400R	24-48 (50/60Hz)	2	24-48	2	Continuous	8-20
H600R	100-240 (50/60Hz)	3	100-220	3		
H800R	380-550 (50/60Hz)	4	–	–		

Note: Allowable voltage function 70% to 110% of coil rated voltage

■ Rating of undervoltage trip (R)

MCCB type	Power consumption				Operating voltage
H series	AC		DC		
	V	VA	V	W	
H 50BA *1	24 (50/60Hz)	0.76	24	0.76	Tripping voltage: 70 to 35% of coil rating voltage Closing voltage: 85% or more of coil rating voltage
H100BA *1	48 (50/60Hz)	1.5	48	1.5	
H100R *1	100-110 (50/60Hz)	3.5	100-110	3.5	
H225BA *1	200-220 (50/60Hz)	2.0	200-220	2.0	
H225R *1	380-440 (50/60Hz)	2.9	–	–	
	440-480 (50/60Hz)	4.3	–	–	
H400R	24 (50/60Hz)	2	24	2	
H600R	48 (50/60Hz)	2	48	2	
H800R	100-110 (50/60Hz)	3	100-110	3	
	200-240 (50/60Hz)	3	200-220	3	
	380-480 (50/60Hz)	4	–	–	

Notes: • Specify the operating voltage when ordering.
*1 Terminal block connection is standard method.

■ Lead wire specifications

H series	Wire size	Wire length
H50BA H100BA, H100R H225BA, H225R H400R H600R H800R	0.5mm^2	500mm

■ Terminal block specifications

MCCB type H series	Terminal screw	Dimensions (mm) Fig.	A	B	C	D	E	F
H50BA, H100BA	M3.5	Fig.1	+4.7	2.9	19.8	32.2	44.5	–
H225BA			+5.5	2.8	19.7	32.1	44.4	
H100R, H225R			+0.2	34.9	51.8	64.2	76.5	
H400R		Fig.2	-6.5	–	–	–	–	76.5
H600R, H800R								85.5

Notes: • Available wire Solid wire : ø1.6
Stranded wire : 2mm^2

Fig.1

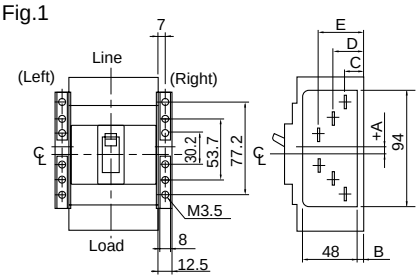

Fig.2

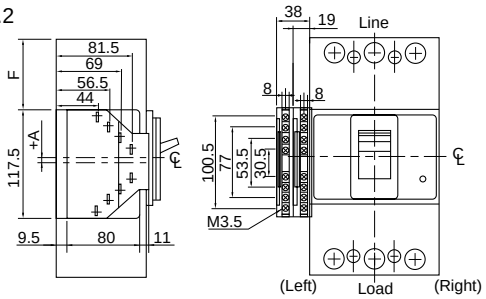

■ Type number

● Auxiliary switches (W) and alarm switches (K)

MCCB type	Type number		
H series	Auxiliary switch / W SPDT: W	Alarm switch / K SPDT: K	Auxiliary switch + Alarm switch / WK
H50BA H100BA	**BZ-W35B□**	**BZ-K35B□**	**BZ-WK35B□**
H225BA	**BZ-W40B□**	**BZ-K40B□**	**BZ-WK40B□**
H100R H225R	**BZ-W50B□**	**BZ-K50B□**	**BZ-WK50B□**
H400R H600R H800R	Factory-mounted accessory	Factory-mounted accessory	Factory-mounted accessory

Notes: • Auxiliary switch and alarm switch for low level circuit are also available on request, in this case add **D** to the type number when ordering. Example: WD, KD
• Replace the □ mark by the **R** when an auxiliary switch or an alarm switch is mounted on right hand side of the breaker. Enter the **L** when it is mounted on left hand side of the breaker.
* 2-pole types are mountable on right side only.

■ Ordering information

Specifty the following.
1. Type number
2. Lead-wire connection or terminal block type

Mechanical interlocking device

■ Dimensions, mm

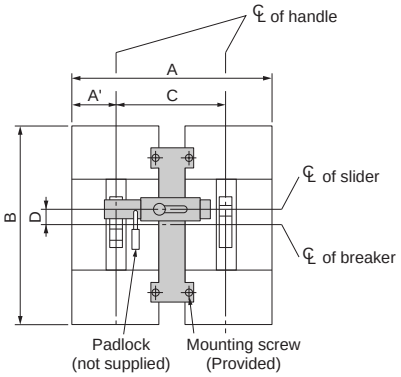

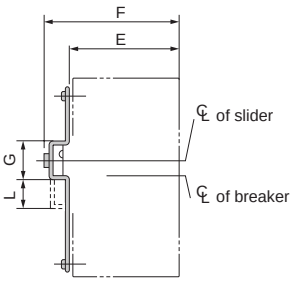

Panel drilling

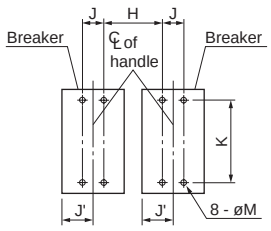

Type	Breaker type	Dimensions, mm A (A')	B	C	D	E	F	G	H	J (J')	K	L	M	Mass (kg)
BZ-M130C-3	H52BA H53BA H102BA H103BA	210 (45)	155	120	8.8	56	85	35	90	30 (45)	132	–	5	0.177
BZ-M140C	H202BA H203BA	240 (52.5)	165	135	9.8	56	85	35	100	35 (52.5)	126	–	5	0.188
	H103R H203R	240 (52.5)	165	135	9	107	123.5	35	100	35 (52.5)	126	–	5	
BZ-M160C	H403R	355 (70)	257	215	0	94.5	126	54.5	171	44 (70)	215	38	7	0.56
BZ-M170C	H603R H803R	500 (105)	275	290	20	94.5	126	54.5	220	70 (105)	243	38	7	0.64

Note: • Applicable padlock(ø3.5) dimensions, mm

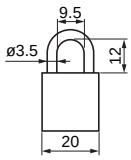

External operating handles

■ Description

Molded case circuit breaker handles are generally directly manual-operated but when mounted in motor control centers or on control panels they are sometimes required to be operated externally. To meet such applications FUJI offers the following three types of handles.

N type handle
This type has a knob handle directly attached to the breaker. It is easily fitted by cutting a hole in the panel, which is provided with a door interlock. They may be fitted to all breakers up to 800 ampere frame sizes.

V type handle
The V type handle may be fitted to breakers of up to 800AF.
A separately sold extension shaft provides distance adjustment between the handle and breaker.
Conformed to EN60947-1 isolation function.
Available for EN60204-1 power breaking device.

AF96-173

BZ-N□C

N type handles

KK03-015

BZ-V□C

V type handle

N type handles BZ-N□C

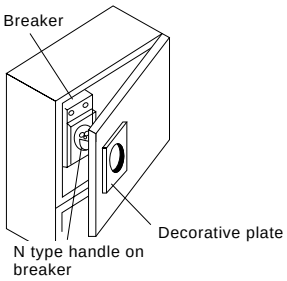

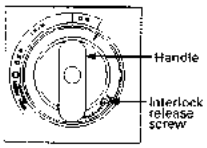

V type handles BZ-V□C

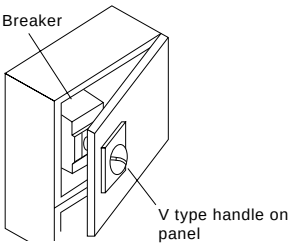

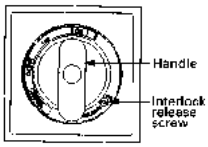

N type handles

H series	N type handle
H52BA, 53BA H102BA, 103BA	**BZ-N30C**
H202BA, 203BA	**BZ-N40C**
H103R, 203R	**BZ-N50C**
H403R	**BZ-N60C**
H603R H803R	**BZ-N70C**

V type handles

H series	V type handle
H52BA, 53BA H102BA, 103BA	**BZ-V30C**
H202BA, 203BA	**BZ-V40C**
H103R, 203R	**BZ-V50C**
H403R	**BZ-V60C**
H603R H803R	**BZ-V70C**

N type operating handles

■ Operating instructions

1. MCCB operation

- Close the door with the handle in the OFF position. Turn the handle to the ON position and the MCCB will be ON.
- Turn the handle to the OFF position and MCCB will be OFF.
- When the breaker trips, the handle moves to the TRIP position. To reset, move the handle to the RESET position.

2. Door locking

- The door cannot be opened when the handle is in the ON, OFF or TRIP position, and can be opened only when the handle is in the OPEN position.
- The breaker cannot be ON when the door is open.
- If it is necessary to open the door with the breaker closed, turn the door lock release screw counterclockwise using a screwdriver.

3. Handle locking

The handle can be locked in either the ON or OFF position when a padlock (not supplied) is used . Pull out the handle lock plate and fit your padlock to the lock plate. If the breaker trips while it is locked in the ON position, the handle moves to the TRIP position.

■ Installation

● BZ-N30C, BZ-N40C

1. Drilling and cutting the door

Drill and cut the door. The dimensions for drilling and cutting are the same whether the MCCB is installed horizontally or vertically.

2. Preparing a base plate (Fig. 1)

Prepare a base plate to adjust breaker mounting position (base plate: not supplied). Front mounting, front connection type breakers can only be suitable for this handle. Drill the breaker mounting holes on the base plate.

3. Fitting the N-handle mechanism and MCCB to the base plate (Fig. 1)

Commonly tighten the N-handle body and MCCB to the base plate with the mounting screws. For N30C, tighten two mounting screws on a diagonal line, and for N40C, tighten four mounting screws. Assemble the driving unit so that the breaker handle engages the N handle arm. (Fig. 4)

4. Mounting the decorative plate

Mount the decorative plate and the retaining plate to the door with screws provided. (Fig. 2)
Adjust the position of the handle unit so that it does not tilt against the breaker. (Fig. 3)

Fig. 1

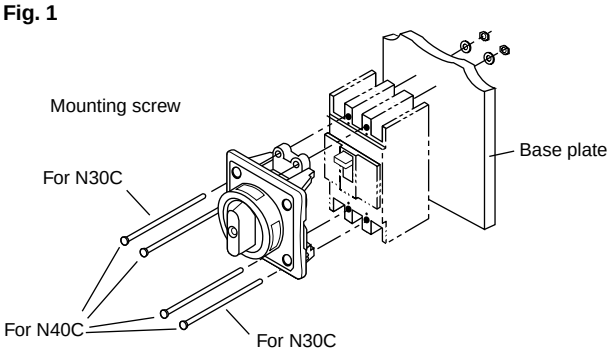

Fig. 2

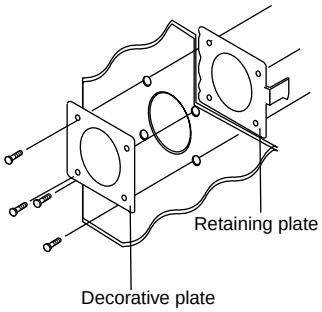

Fig. 3

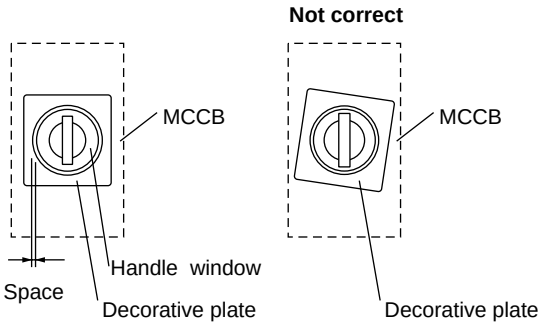

Fig. 4

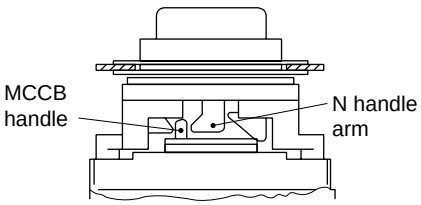

■ Installation

● BZ-N60C, BZ-N70C

1. Drilling and cutting the door

Drill and cut the door. The dimensions for drilling and cutting are the same whether the MCCB is installed horizontally or vertically.

2. Preparing a base plate (Fig. 1)

Prepare a base plate to adjust breaker mounting position (base plate: not supplied). Front mounting, front connection type breakers can only be suitable for this handle. Drill the breaker mounting holes on the base plate.

3. Fitting the N-handle mechanism and MCCB to the base plate (Fig. 1)

Commonly tighten the N-handle body and MCCB to the base plate with the four mounting screws. Assemble the driving unit so that the breaker handle engages the N handle arm. (Fig. 4)

4. Mounting the decorative plate

Mount the decorative plate and the retaining plate to the door with screws provided. (Fig. 2)

Adjust the position of the handle unit so that it does not tilt against the breaker. (Fig. 3)

Fig. 1

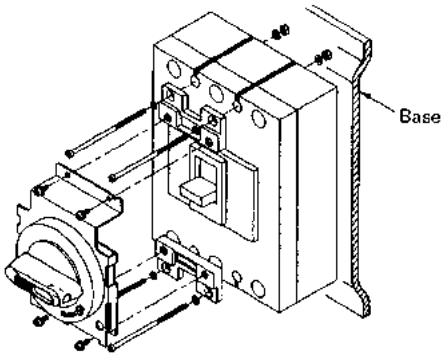

Fig. 2

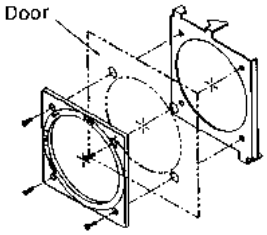

Fig. 3

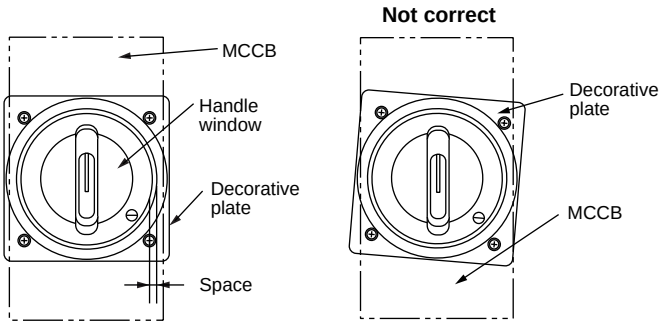

Fig. 4

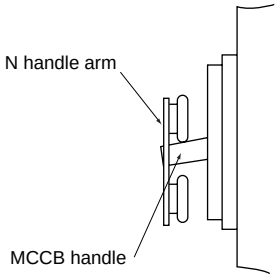

■ Type number nomenclature

BZ – N□ C T – R

Installation
Blank: Vertically
R: Horizontally, right line side
L: Horizontally, left line side

Door locking device
Blank: Provided
T: Not provided

Basic type

Note:
To order an N handle for front-mounting rear connection breakers, add "-X" to the type number, for plug-in mounting breakers, add "-P" to the type number.

■ Dimensions, mm

BZ-N30C to BZ-N50C (Dust proof paking: BZ-NP-1C, optional)

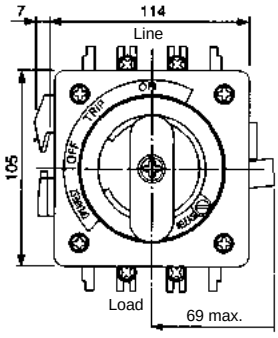

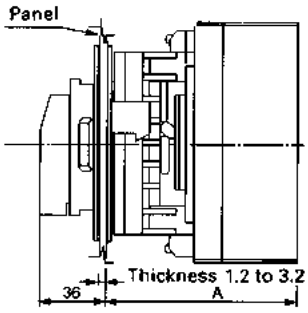

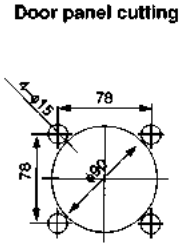

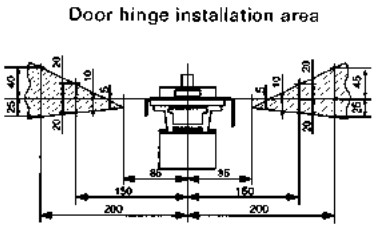

Install the door hinge in the shaded area.

Breaker type	Handle type	A	Mounting Screw	Mass (kg)
H50BA, 100BA	**BZ-N30C**	103	M4 × 85	0.56

Breaker type	Handle type	A	Mounting Screw	Mass (kg)
H225BA	**BZ-N40C**	103	M4 × 85	0.56
H100R, H225R	**BZ-N50C**	142	M4 × 125	0.62

BZ-N60C, BZ-N70C (Dust proof packing: BZ-NP-2, optional)

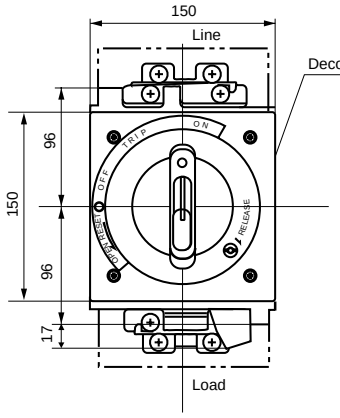

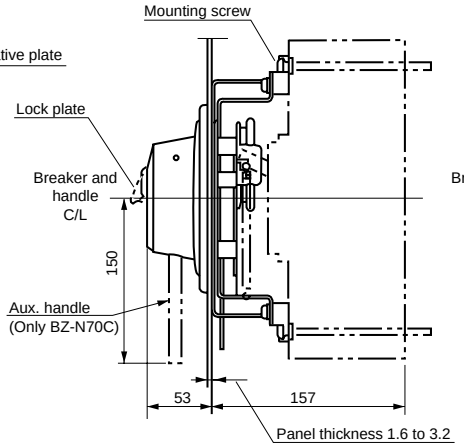

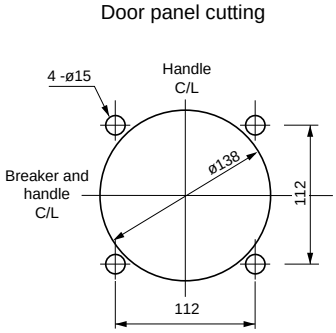

Note: • Handle protection degree IP50 (IEC60529, JIS C 0920) (with the optional dust-proof packing)
• The handle cannot hold the door.

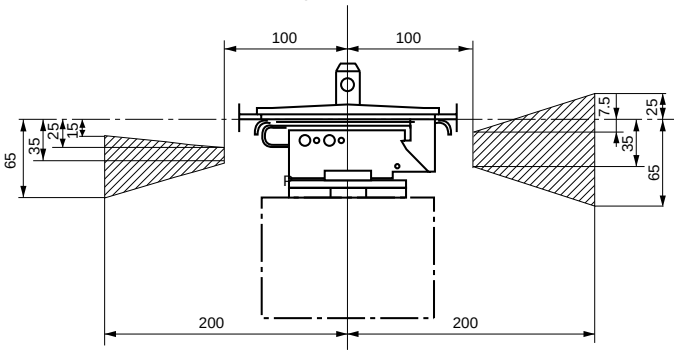

Install the door hinge in the shaded area.

Notes:
1. The N type handles are used with front mounting front connection type breakers. They are normally installed vertically. However, it is possible to install them horizontally if required. In this case please specify so in your order.
(Example) Specify as follows:
BZ-N□C-R..... Installed horizontally, the line positioned on the right side.
BZ-N□C-L..... Installed horizontally, the line positioned on the left side.

2. Breakers use different size screws for the P-type (Plug-in) breakers

Breaker type	Handle type	Mounting screw	Mass (kg)
H400R	**BZ-N60C**	M6 x 110	1.9
H600R, H800R	**BZ-N70C**	M6 x 110	1.9

V type operating handles, up to 225AF

■ Operating instructions

1. MCCB operation

- Close the door and turn the handle to the ON position and the breaker will be positioned at ON.
- When the breaker is interrupted automatically the handle will move to the TRIP position.
- To reset move the handle to the RESET position.

2. Door panel locking

- Turn the handle to the RESET position and the lock mechanism will be released thus allowing the door to be opened.
- The door cannot be opened when the breaker is positioned at ON.

3. Handle locking

The padlock can lock the handle in the OFF position.

- Locking MCCB with the door open : Fig.1
- Locking MCCB with the door closed : Fig.2

Pull out the lock plate and hook the padlock.

4. Interlock release

This type is provided with an interlock release screw. Turn this screw if it is necessary to open the door in the ON position. This release the lock and allows the door to be opened. When reclosing the door, make sure the handle of the breaker coincides with the position (ON or OFF) of the external handle position.

■ Installation

BZ-V20C to BZ-V50C

1. Drilling and cutting of the door panel

Drill and cut the door panel as shown in the drawing.

2. Mounting of the MCCB

The distance between the backside of the door panel and breaker mounting plate should be the dimension "H" shown in the drawing below.

H dimensions, mm (Fig.3)

- BZ-V30C: 105
- BZ-V40C: 105
- BZ-V50C: 144

3. Mounting the driving unit

- Set the breaker handle to the OFF position. Assemble the driving unit so that the breaker handle engages the V handle arm. (Fig.4)
- Secure the driving unit and breaker together to the mounting plate by tightening the four attached mounting screws. (Fig.5)

4. Mounting the handle unit

- Put the handle unit, cover holder, packing, and retainer in front of and behind the panel and tighten the screws temporarily as shown in Fig.6. Adjust the position of the handle unit so that it does not tilt against the breaker. (Fig.7)
- Put the handle of the handle unit in the OFF position and close the door. Check that the shaft engages the latch when the door closes. (Fig.8)

Fig. 1

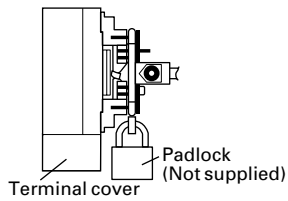

Fig. 2

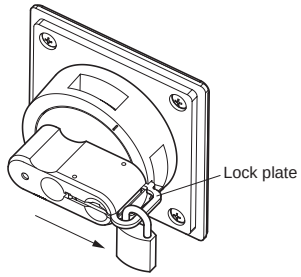

Fig. 3

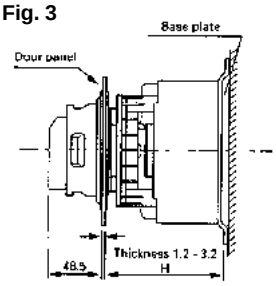

Fig.4

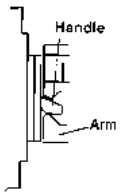

Fig. 5

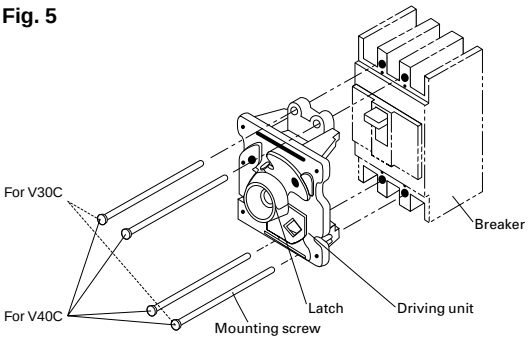

Fig. 6

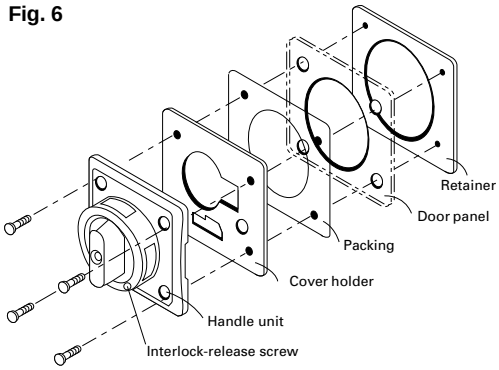

Fig. 7

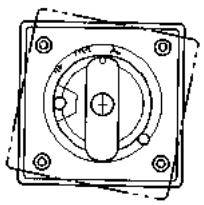

Fig. 8

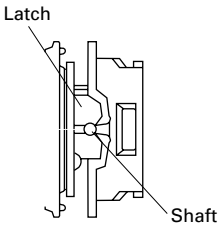

■ Dimensions, mm

BZ-V30C, V40V, V50C

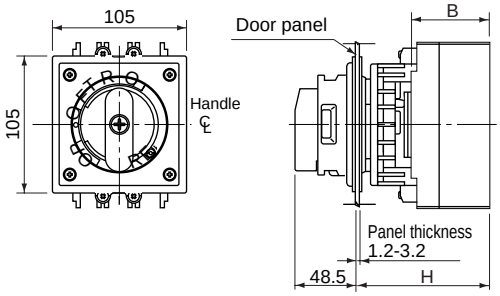

Door panel cutting

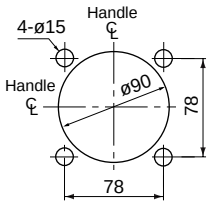

Optional shaft BZ-VS1

X = H - 96

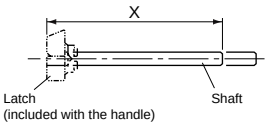

The distance between the handle and breaker can be shortened by cutting the optional shaft.

Door hinge installation area

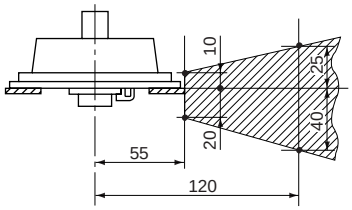

Install the door hinge in the shaded area.

Breaker type	Handle type	Standard type H	With the optional shaft (X=154)			Mounting screw	Mass (kg)
H series			H	Area in which the hinge with H can be installed	B		
H50BA H100BA	**BZ-V30C**	105	250	142 to 250	60	M4 x 85	0.67
H225BA	**BZ-V40C**	105	250	142 to 250	60	M4 x 85	0.67
H100R H225R	**BZ-V50C**	144	289	181 to 289	99	M4 x 125	0.67

Notes:
- Handle protection degree IP54 (IEC60529, JIS C 0920)
- The handle cannot hold the door.

V type operating handles, 400AF to 800AF

■ Operating instructions

1. MCCB operation

- Close the door and turn the handle to the ON position and the MCCB will be positioned at ON.
- When the MCCB is interrupted automatically the handle will move to the TRIP position.
- To reset move the handle to the RESET position.

2. Door panel locking

- Turn the handle to the RESET position and the lock mechanism will be released thus allowing the door to be opened.
- The door cannot be opened when the breaker is positioned at ON.

3. Handle locking

The padlock can lock the handle in the OFF position.

- Locking MCCB with the door open: Fig. 1
- Locking MCCB with the door closed: FIg. 2

4. Interlock release

This type is provided with an interlock release screw. Turn this screw if it is necessary to open the door at the ON position. This releases the lock and allows the door to be opened. When reclosing the door, make sure the handle of the breaker coincides with the position (ON or OFF) of the external handle position.

■ Installation

BZ6V60C, V70C

1. Drilling and cutting of the door panel

Drill and cut the door panel as shown in the drawing.

2. Mounting of the MCCB

The distance between the backside of the door panel and MCCB mounting plate should be the dimension as shown in Fig.3.

3. Mounting the driving unit

- Set the MCCB handle to the OFF position. Assemble the driving unit so that the MCCB handle engages the V handle arm. (Fig. 4)
- Secure the driving unit and MCCB together to the mounting plate by tightening the four attached mounting screws. (Fig. 5)

4. Mounting the handle unit

- Put the handle unit, packing and retainer in front of and behind the door panel and tighten the screws temporarily as shown in Fig.6. Adjust the position of the handle unit so that it does not tilt against the MCCB. (Fig. 7)
- Put the handle of the handle unit at OFF position and check the latch engages the keeper and close the door while holding the handle unit cover by hand.
  Final tightening the screws should be performed as keep the engaging position. (Fig. 8)

Fig. 1

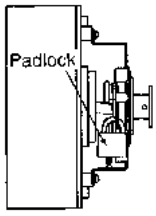

Fig. 2

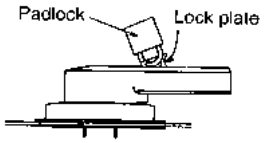

Fig. 3

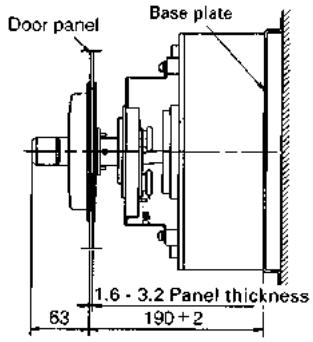

Fig. 4

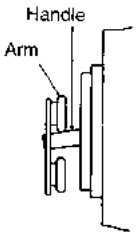

Fig. 5

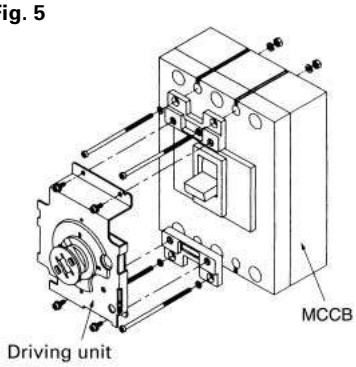

Fig. 6

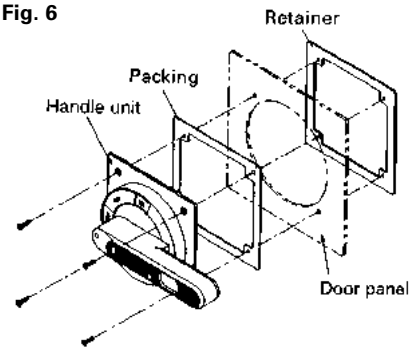

Fig. 7

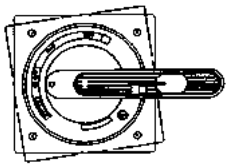

Fig. 8

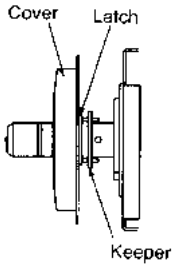

■ Type number nomenclature

BZ–V □ C – □

- **Mounting**
  - Blank: Front mounting, front connection
  - X: Front mounting, rear connection
  - P: Plug-in mounting
- **Basic type**

Note:
To order a V handle for front-mounting rear connection breakers, add "-X" to the type number; for plug-in mounting breakers, add "-P" to the type number.

■ Dimnsions, mm

BZ6V60C, 6V70C, BZ-V60C, V70C

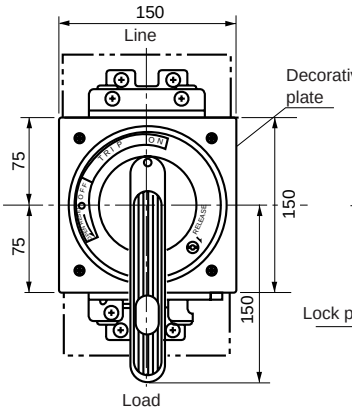

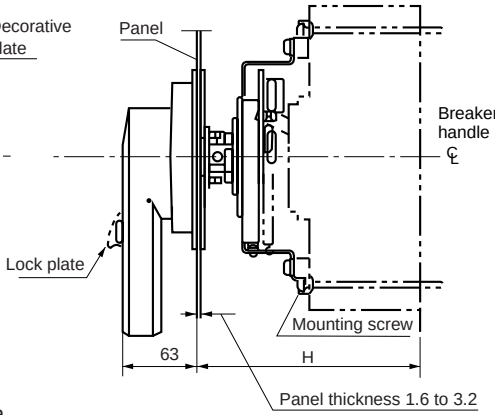

Door panel cutting

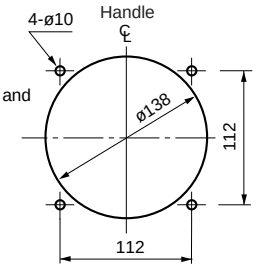

Optional shaft
(BZ-VS2)

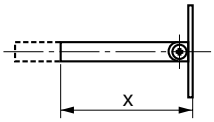

The distance between the handle and breaker can be shortened by cutting the optional shaft.
(X = H - 161.5)

Door hinge installation area

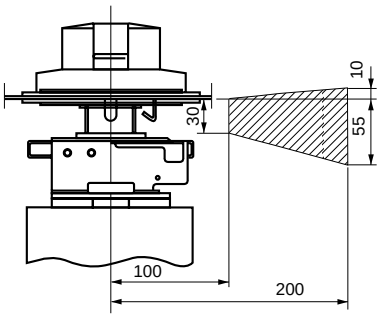

Install the door hinge in the shaded area.

Breaker H series	Handle type	Standard type H	With the optional shaft H	Area in which the hinge with H can be installed	Mass (kg)
H400R	**BZ-V60C**	190±2	250±2	202 to 250	2.2
H600R H800R	**BZ-V70C**				2.2

Notes:
- Handle protection degree IP54 (IEC60529, JIS C0920).
- The handle cannot hold the door.
- Breakers use different size screws for the X type (rear connection) or P-type (Pulg-in) breakers.

Pressed steel enclosures

■ Description

BZ-type enclosures are available in three types — with V-type handle which allows the operation from the outside and other with the operating handle of the breaker extending from it to allow it to be directly switched ON or OFF from outside the enclosure.
Enclosures with V-type handles are provided with a door interlocking mechanism which prevents the door from being opened in the ON condition.
Knockout holes for wiring use are provided as shown in the diagram.

Standard AF90-780 | **Dust-proof** AF96-175 | **Rain-proof** CP97-2636

■ Type of enclosures

Breaker type	Enclosure	
H series	Standard	With V type handle Dustproof : IP40
H52BA, H53BA H102BA, H103BA	**BZ-C30B-3**	**BZ-CV30C**
H202BA, H203BA	**BZ-C40B**	**–**
H103R H203R	**BZ-C50B**	**–**
H403R	**BZ-C60B**	**BZ-CV60C**
H603R H803R	**BZ-C70B**	**BZ-CV70C**

Notes: • The provided V type handles do not conform to EN and IEC standards.

■ Ordering information

Specify the following:
1. Type number of enclosures

■ Dimensions, mm

Standard

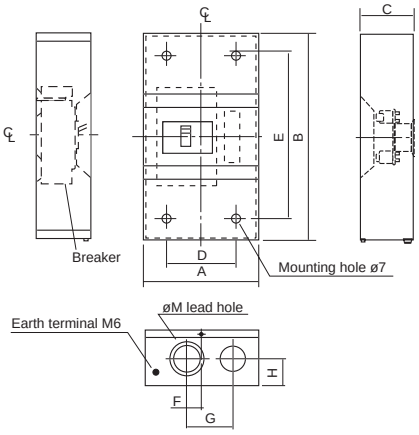

With V type handle

BZ-CV30C

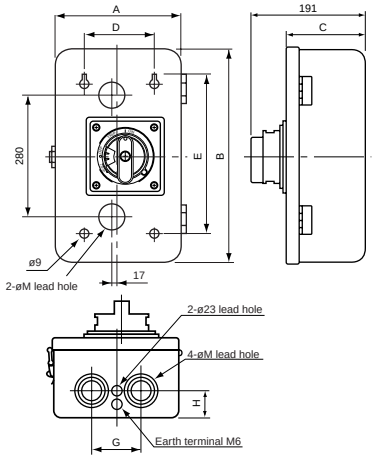

BZ-CV60C, 70C

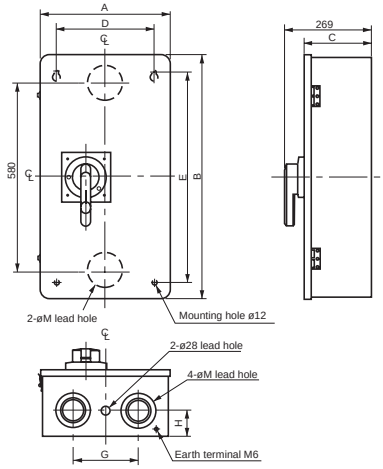

■ Connection method diagrams

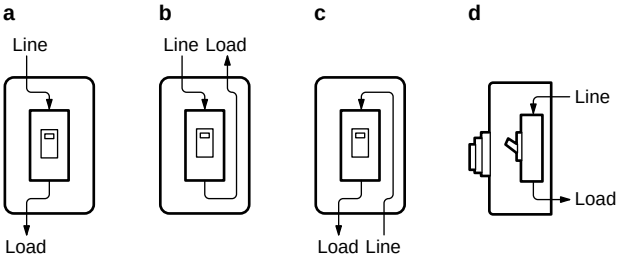

Type	Connection	A	B	C	D	E	F	G	H	M (Ø)	Mass (kg)
BZ-C30B-3	a, b, c	200	320	95	120	240	25	80	40	30, 45	2.4
BZ-C40B		200	360	95	120	280	25	80	45	40, 55	2.5
BZ-C50B		200	360	140	120	280	25	80	45	40, 55	3.1
BZ-C60B		400	750	175	300	650	100	200	80	63, 78, 106	19.3
BZ-C70B											19.3
BZ-CV30C	a, b, c, d	250	400	142	170	320	–	110	50	35, 52, 63	6.4
BZ-CV60C		400	750	206	300	650	–	200	80	63, 78, 106	21.7
BZ-CV70C											21.7

Terminal covers

■ Description
These terminal covers are used as guards to prevent accidental touch with live line terminations.
These terminal covers can be fitted to either line or load side.

● Up to 225AF
Short type BZ-TS
• Snap-on fitting
Long type BZ-TB
• Crimp connection use
● 400AF and larger
Long type BZ-TB
• Transparent

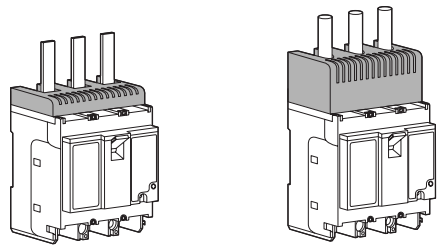

Short type **Long type**

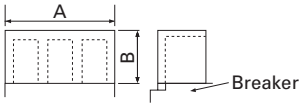

● IEC and CE marking conformed

Packing quantity : 2 pcs.

Breaker type H series	Terminal cover Short type	A (mm)	B (mm)	Mass (g)	Terminal cover Long type	A (mm)	B (mm)	Mass (g)
H52BA, H53BA H102BA, H103BA	**BZ-TS30B-3**	90	10	43	**BZ-TB30B-3**	90	40	86
H202BA, H203BA	**BZ-TS40B**	105	10	60	**BZ-TB40B**	105	50	107
H103R H203R	**BZ-TS50B**	105	10	76	**BZ-TB50B**	105	40	175
H403R	**–**	–	–	–	**BZ-TB60B**	172	110	549
H603R H803R	**–**	–	–	–	**BZ-TB70B**	230	135	568

Insulation barriers

■ Description

The interphase barriers are provided on frame size of 50AF to 800AF breakers for front mounting. The barriers are installed in the molded slots between terminals.
The earth barrier is used to increase the insulation with the mounting plate surface when two crimp terminals are wired.
Installation of these barriers after wiring is possible even when an external accessory is installed.

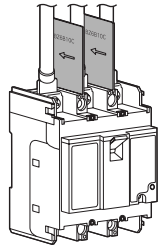

Interphase barrier

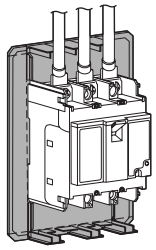

Earth barrier

● Interphase barrier

Breaker type H series	Interphase barrier Type	Dimensions, mm A	 B	Packing quantity	Mass (g)
H52BA, 53BA H102BA, 103BA	**BZ-B30B**	50	51	4	29
H202BA H203BA	**BZ-B40B**	80	52	4	48
H103R H203R	**BZ-B50B**	80	90.5	4	82
H403R H603R H803R	**B-43A**	105	95	4	131

Note: *1 Barrier type for the load side is BZ-B35B.
Interphase barriers are standard provided for the front mounting type breaker.

Interphase barrier

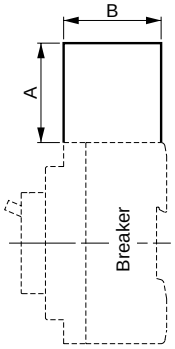

● Earth barrier

Breaker type H series	Earth barrier Type	Dimensions, mm*2 A	 B	Packing quantity	Mass (g)
H52BA, 53BA H102BA, 103BA	**BZ-BL35B**	130 (90, 110)	70 (40)	2	16
H202BA H203BA	**BZ-BL40B**	190 (105, 147)	100 (50, 72)	2	48
H103R H203R	**BZ-BL50B**	190 (105, 147)	100 (50, 72)	2	48

Note: *2 The value in parentheses is the dimensions after the barrier is cut.

Earth barrier

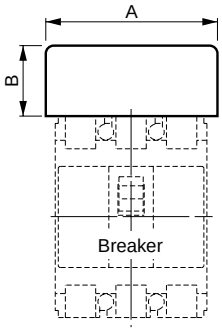

Mounting modification kits

Standard type breakers are front mounting front connections. The standard breaker can easily be modified to become front mounting rear connection and flush mounting types by using the modification kits.

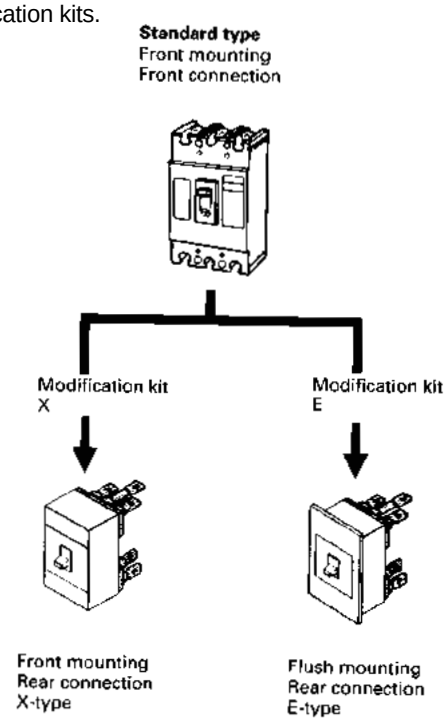

Modification kits

● **For front mounting, front connection** (Flat terminal)

Breaker type	Kit type For 2-pole	For 3-pole
H50BA, 100BA	**BZ-S35B-1002**	**BZ-S35B-1003**
H225BA	**BZ-S50B-2252**	**BZ-S50B-2253**
H100R, 225R	**–**	**BZ-S50B-2253**

● **For front mounting, rear connection** (X type)

Breaker type	Kit type For 2-pole	For 3-pole
H50BA, 100BA	**BZ-X31C-1002**	**BZ-X30C-1003**
H225BA	**BZ-X40B-2252**	**BZ-X40B-2253**
H100R, 225R	**–**	**BZ-X50B-2253**
H400R	**–**	**BZ-X60B-4003**

● **For flush mounting, rear connection** (E type)

Breaker type	Kit type For 2-pole	For 3-pole
H50BA, 100BA	**BZ-E31C-1002**	**BZ-E30C-1003**
H225BA	**BZ-E40B-2252**	**BZ-E40B-2253**
H100R, 225R	**–**	**BZ-E50B-2253**
H400R	**–**	**BZ-E60B-4003**

■ Mass

For front mounting, front connection Kit type	Mass (kg)	For front mounting, rear connection (X type) Kit type	Mass (kg)	For flush mounting, rear connection (E type) Kit type	Mass (kg)
BZ-S35B-1002	0.25	BZ-X30C-1003	0.63	BZ-E31C-1002	0.86
BZ-S35B-1003	0.35	BZ-X31C-1002	0.39	BZ-E30C-1003	1.11
BZ-S50B-2252	0.35	BZ-X40B-2252	0.52	BZ-E40B-2252	0.97
BZ-S50B-2253	0.5	BZ-X40B-2253	0.77	BZ-E40B-2253	1.22
		BZ-X50B-2253	0.80	BZ-E50B-2253	1.27
		BZ-X60B-4002	1.98	BZ-E60B-4002	3.40
		BZ-X60B-4003	2.71	BZ-E60B-4003	3.67

■ Padlocking device

Breaker handles can be fitted with locks. The handle can be locked at either the ON or OFF position. If an overcurrent flows, the breaker trips even when the handle is kept locking. Add the suffix Q1 or Q2 to the ELCB type number to order the padlocking device (not sold separately).

Q1 : Cap type, Q2 :Plate type

Applicable padlocking device

H series

H50BA
H100BA
H100R
H225BA
H225R
H400R
H600R
H800R

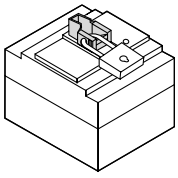

Cap type Q1*(400 to 800AF)

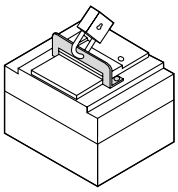

Plate type Q2
A padlock is not provided.

■ Handle locking covers/50 to 800AF

Breaker type Handle locking cover	Handle locking cover
H50BA, H100BA	**BZ6L30C**
H225BA	**BZ6L40C**
H100R, H225R	**BZ-L50B**
H400R, H600R, H800R	**BZ-L70B**

Solid-state trip types, SA1000E, 1200E, 1600E

■ Description

- **Equipped with a load current pre-trip alarm**
  Constantly monitors the load current, and outputs an alarm when the set current is exceeded.
- **Adjustable rated current**
  The rated current is easy to vary in 5 to 6 steps using an adjustment dial.
- **Wide-range-adjustable trip characteristics**
  The current and time for instantaneous tripping and short-/long-time delay tripping can be set by the user.
- Adjustable ground fault tripping determinate and set a current level for ground fault detection in the ranging between 10% to 40% of the rated CT current.

■ Breaking capacities

Series	Breaker ampere frame	Basic type	Pole	Rated current (A)	Insulation voltage Ui (V)	Breaking capacity [Icu/Ics] IEC60947-2 AC (kA) 230V	400V	440V	500V	600V	DC 250V
S	1000	**SA1003E**	3	500-600-700-800-900-1000	690	100/75	65/49	65/49	45/34	25/19	–
		SA1004E	4	500-600-700-800-900-1000	690	100/75	65/49	65/49	45/34	25/19	–
	1200	**SA1203E**	3	600-700-800-1000-1200	690	100/75	65/49	65/49	45/34	25/19	–
		SA1204E	4	600-700-800-1000-1200	690	100/75	65/49	65/49	45/34	25/19	–
	1600	**SA1603E**	3	800-900-1000-1200-1400-1600	690	125/94	85/64	85/64	65/49	45/34	–
		SA1604E	4	800-900-1000-1200-1400-1600	690	125/94	85/64	85/64	65/49	45/34	–

■ Type number nomenclature

SA1203E / 1200 X M WKF F=AC200V I I=AC100V

Basic type

Rated current

Mounting and connection
Blank: Front mounting, front connection
X: Front mounting, rear connection
E: Flush mounting, rear connection

Operating device
Blank: Manual operation
M: Motor operating

Internal accessory
W: Auxiliary switch
K: Alarm switch
F: Shunt trip
R: Undervoltage trip

Control voltage for protection function
I= □ : Adjustable pre-alarm
U= □ : Adjustable ground fault current trip

Rated voltage	Allowable voltage
100 to 120V AC	85 to 132V
200 to 240V AC	170 to 264V

Protection function
Adjustable pre-alarm
Adjustable ground fault current trip

Operating voltage for accessory
F= □ : Shunt trip device
R= □ : Undervoltage trip device
M= □ : Motor operating mechanism

■ Ordering information

Specify the following:

1.Type number

Molded Case Circuit Breakers

Solid-state trip types
Quick selection guide

■ S series

Frame			1000A		1200A		1600A	
Pole			3	4	3	4	3	4
Type			**SA1003E**	**SA1004E**	**SA1203E**	**SA1204E**	**SA1603E**	**SA1604E**
Rated current(A)			Adjustable 500—600—700—800—900—1000		Adjustable 600—700—800—1000—1200		Adjustable 800—900—1000—1200—1400—1600	
Rated insulation voltage(V)		AC	690		690		690	
		DC	—		—		—	
Rated breaking capacity(kA) [IEC 60947-2] (Icu/Ics)		600V AC	25/19	25/19	25/19	25/19	45/34	45/34
		500V AC	45/34	45/34	45/34	45/34	65/49	65/49
		440V AC	65/49	65/49	65/49	65/49	85/64	85/64
		415V AC	65/49	65/49	65/49	65/49	85/64	85/64
		400V AC	65/49	65/49	65/49	65/49	85/64	85/64
		380V AC	85/64	85/64	85/64	85/64	100/75	100/75
		230V AC	100/75	100/75	100/75	100/75	125/94	125/94
		250V DC	—	—	—	—	—	—
Dimensions (mm) *Page 95*	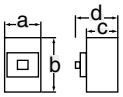	a	210	280	210	280	210	280
		b	370	370	370	370	370	370
		c	120	120	120	120	140	140
		d	171	171	171	171	191	191
Protection function	Long-time delay tripping time (s)		5-30 (at 6In) (Adjustable)					
	Short-time delay tripping current (A)		2In-10In (Adjustable)					
	Short-time delay tripping time (s)		0.1-0.3 (Adjustable)					
	Instantaneous tripping current (kA)		3.0-12 (Adjustable)		3.75-15 (Adjustable)		4.8-19.2 (Adjustable)	
	Ground fault current tripping or pre-alarm		●		●		●	
Mass(kg) Front mounting, front connection			22	28	22	28	27	35
Tripping device			Solid-state		Solid-state		Solid-state	
Trip button			Provided		Provided		Provided	
Mounting								
Front mounting, front connection		No mark	●		●		●	
Front mounting, rear connection		X	● Bar Stud		● Bar stud		● Bar stud	
Flush mounting, rear connection		E	● Bar Stud		● Bar stud		● Bar stud	
Internal accessories								
Auxiliary switch		W	●		●		●	
Alarm switch		K	●		●		●	
Shunt trip		F	●		●		●	
Undervoltage trip		R	●		●		●	
Pre-Alarm		I	▲		▲		▲	
Ground fault trip		U	▲		▲		▲	
External accessories								
Operating handle N-type		N	●		●		●	
G-type		G	●		●		●	
Terminal cover Long		TB	▲		▲		▲	
Insulation barrier Interphase		B	●		●		●	
Handle locking cover		L	●		●		●	
Lead-wire terminal block		A	●		●		●	

●Available – Not available ▲ Factory-mounted accessory

Protection function

• Long-time delay tripping (Rated current adjustable)

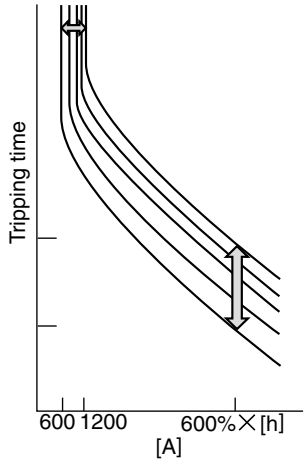

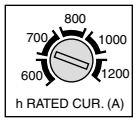

Current setting range

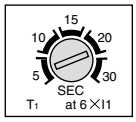

Time setting range, 5 to 30s at 600% of the rated current I_1

• Adjustable instantaneous tripping

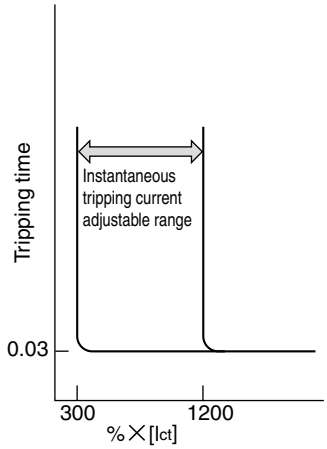

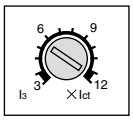

Current setting range, 300 to 1200% of rated primary current I_{ct}

• Adjustable short-time delay tripping

Coordination with solid-state trip type MCCB

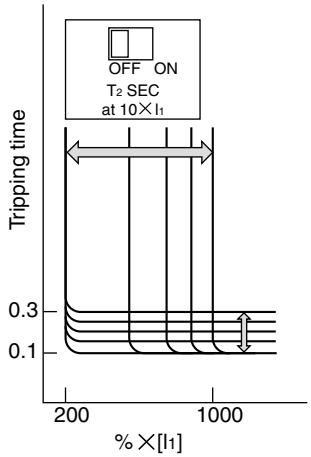

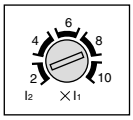

Current setting range, 200 to 1000% of the rated current I_1

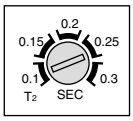

Time setting range, 100 to 300ms

Coordination with thermal-magnetic trip type MCCB

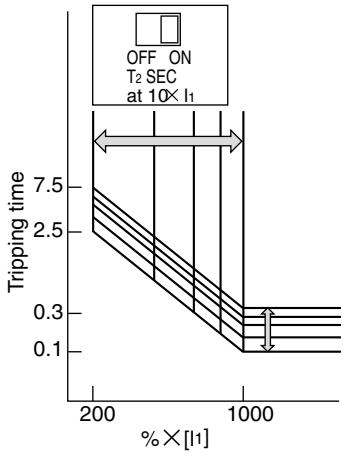

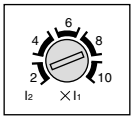

Current setting range, 200 to 1000% of the rated current I_1

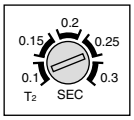

Time setting range, 100 to 300ms. ramp characteristic

• Adjustable pre-trip alarm

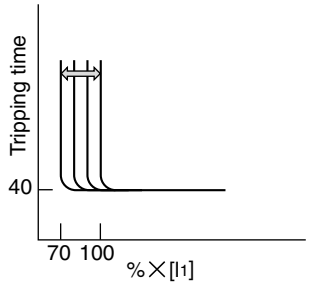

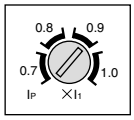

Pre-alarm current setting range, 70 to 100% of the rated current I_1.

Pre-trip alarm operating time, 40s constant.

• Adjustable ground fault tripping

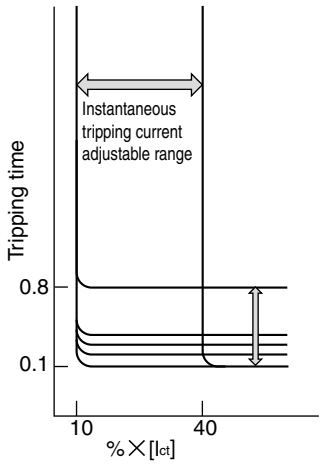

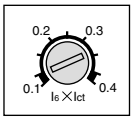

Current setting range, 10 to 40% of the rated primary current

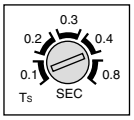

Time setting range, 100 to 800ms

■ Pre-trip alarm function

Constantly monitors the load current, and outputs an alarm when it exceeds the set current. Helpful for preventive maintenance and power management.
The pre-trip alarm operates via an LED on the breaker surface and a contact output. Separate power supply is necessary.
The pre-trip alarm setting range allows adjustment to 70, 80, 90, or 100% of the rated current.

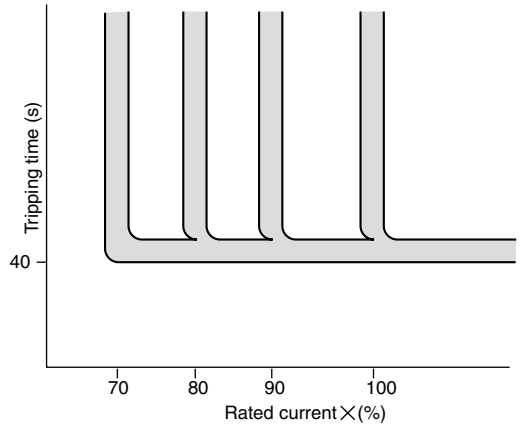

■ Multi protection function

Wide-range-adjustable trip characteristics with high precision. Either ground fault tripping or the pre-trip alarm can be selected as an option (not both).

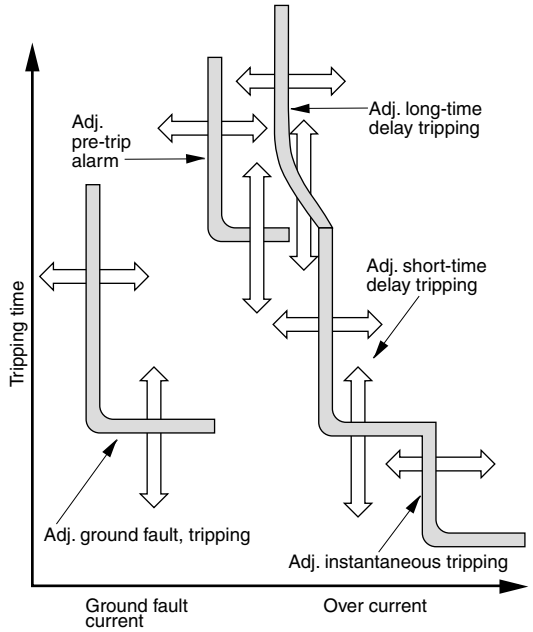

• Pre-trip alarm characteristics

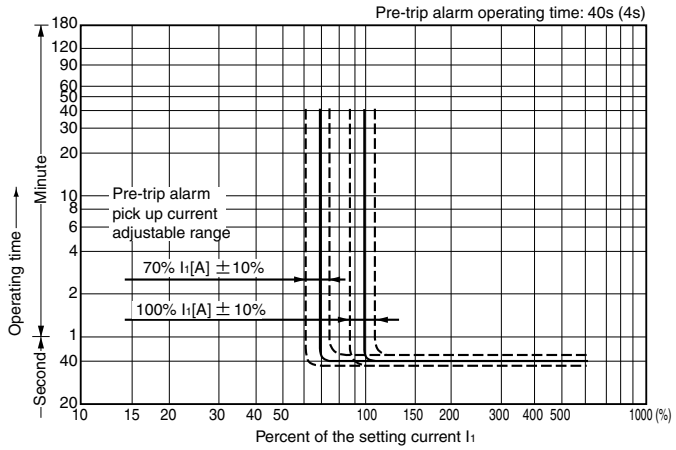

• Ground fault tripping characteristics

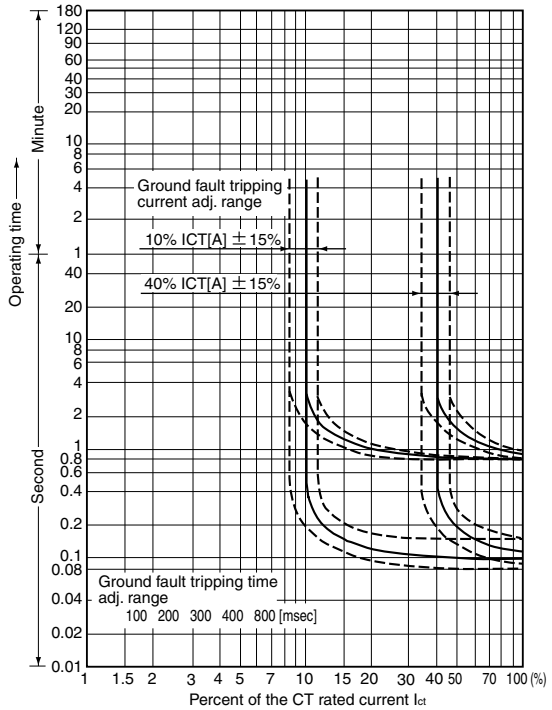

■ Terminal Connection/Front mounting, Front Connection

• MCCBs and cables according to the screw size and tightening torque as shown in the table below.

MCCB type	Screw and Bolt	Size [mm]	Tightening torque [N·m]
SA1003E, SA1004E SA1203E, SA1204E	 Hexagonal head bolt	M12 x 55	40.2 to 65.7
SA1603E, SA1604E	Not supplied	–	–

■ Available configurations

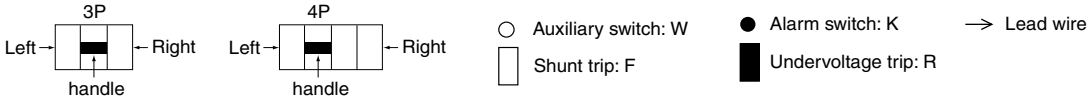

	SA1003E **SA1203E** **SA1603E**	**SA1004E** **SA1204E** **SA1604E**
Auxiliary switch SPDT W		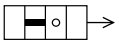
Alarm switch SPDT K		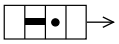
Shunt trip F		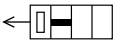
Under voltage trip R		
W+K		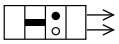
W+F	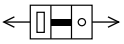	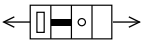
W+R	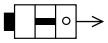	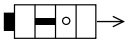
K+F	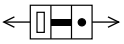	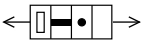
K+R	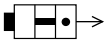	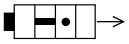
W+K+F	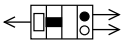	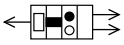
W+K+R	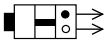	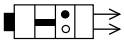
W2		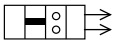
W2+K		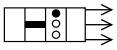
W2+F	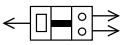	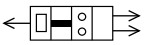
W2+R	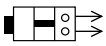	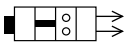
W2+K+F	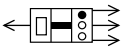	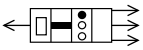
W2+K+R	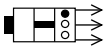	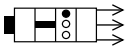

■ Auxiliary switch and alarm switch

These devices indicate the MCCB's operation status electrically.

- Auxiliary switch (W)
  Auxiliary switch indicates the ON/OFF status of MCCB.
- Alarm switch (K)
  Alarm switch indicates the trip status of MCCB. MCCB trips at the time when the following condition occurs:
  · Overcurrent
  · Short-circuit current

■ Ratings of auxiliary switch (W) and alarm switch (K)

• Standard type

AC			DC			Minimum load
Voltage (V)	Current (A)		Voltage (V)	Current (A)		
	Resistive load	Inductive load		Resistive load	Inductive load	
480	3	2	250	0.3	0.3	30V DC 26.7mA 5V DC 160mA
250	5	5	125	0.3	0.6	
125	5	5	30	5	4	

Note: Inductive load condition: Power factor 0.4 or more (AC), time constant 7ms or less (DC)

• For low level circuit

AC		DC		Minimum load
Voltage (V)	Current (A)	Voltage (V)	Current (A)	
	Resistive load		Resistive load	
125	0.1	30	0.1	30V DC 1mA 5V DC 1mA

Note 1: When ordering, specify WD, KD.

• Operation of auxiliary switch and alarm switch

Type of Accessory	Handle position		
	ON	OFF	TRIP
Auxiliary switch (W)	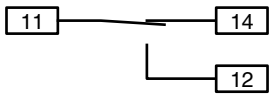	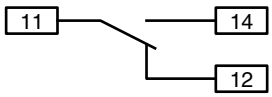	
Alarm switch (K)	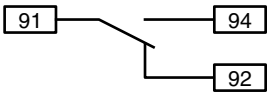		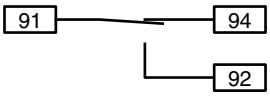

06

■ Shunt trip (F) and undervoltage trip device (R)

• Shunt trip (F)
The purpose of the shunt trip device is to trip the MCCB remotely.
• Undervoltage trip device (R)
The undervoltage trip device trips the MCCB when the MCCB primary voltage is lower than the specified voltage.

• Ratings of shunt trip device (F)

Rated voltage	Coil energized current (A) *1	Allowable voltage fluctuation (V)	Maximum operating time (ms) *2
100-115V AC	1.1	85-126.5	30
200-480V AC	0.93	170-528	
24V DC	2.52	18-26.4	
48V DC	1.55	36-52.8	
100-115V DC	0.67	75-126.5	
200-230V DC	0.35	150-253	

Note *1: The current value at rated voltage maximum value (60Hz AC)
*2: The time period from when the rated voltage is applied to the shunt trip coil until the MCCB main contact opens.
• : The shunt trip device operation is short-time rating. To prevent the device from burning, continuous signal to the device should not be applied.

• Ratings of undervoltage trip device (R)

Rated voltage	Coli power consumption (VA)	Tripping voltage range (V)	Closing voltage (V)	Maximum applicable voltage (V)	Maximum operating time (ms) *2
100-120V AC	5 or more	70-20	85 or more	132 or less	30
200-240V AC		140-40	170 or more	264 or less	
380-450V AC		266-76	323 or more	495 or less	

Rated voltage	Coil energized current (A) *1	Tripping voltage range (V)	Closing voltage (V)	Maximum applicable voltage (V)	Maximum operating time (ms) *2
24V DC	22.7	16.8-4.8	20.4 or more	26.4 or less	30
100-115V DC	6.0	70-20	85 or more	126.5 or less	

Note *1: The current value at rated voltage maximum value
*2: The time period from when the rated voltage is applied to the shunt trip coil until the MCCB main contact opens.
• : When you turn on the tripped MCCB, perform the reset operation first and then turn ON the MCCB.

• Wiring diagram and terminal symbol

Type of accessory		Wiring diagram and terminal symbol
Shunt trip device	F	With burn-out-preventive contact 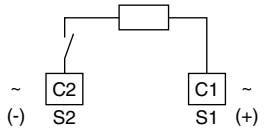
Undervoltage trip device	R	With UVR controller 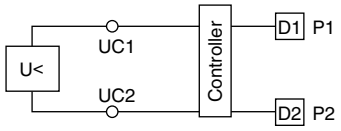 Without UVR controller 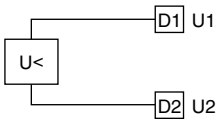

■ UVR controller

- When using AC type undervoltage trip device (R), be sure to use a UVR controller.
- UVR controllers are equipped with standard type MCCBs at factory shipment. Separately installed type controllers are also available.

• UVR controller wiring diagram

Installing UVR controller on MCCB

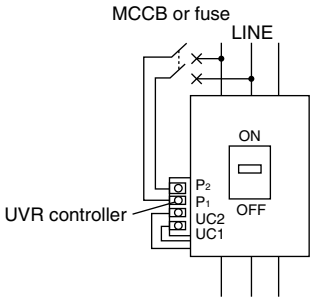

On MCCBs at factory shipment, lead wires of terminals UC1 and UC2 are provided.

Installing UVR controller separately

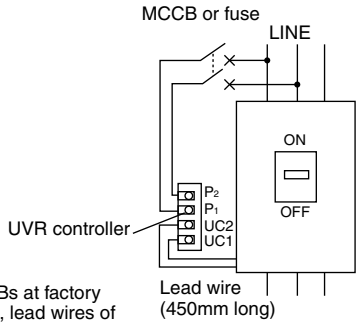

• Installing position of UVR controller on MCCB and terminal arrangement

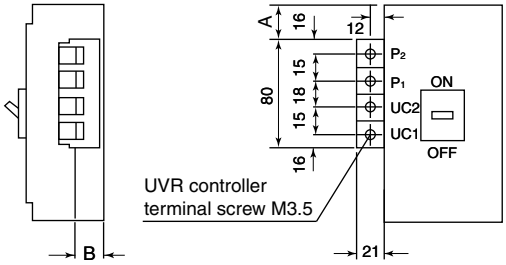

Unit: mm

Frame size	MCCB type	A	B
1000, 1200	SA1003E, SA1004E SA1203E, SA1204E	114(138)	72
1600	SA1603E, SA1604E	114(138)	92

Notes: • Terminal screw tightening torque: M3.5 screw, 0.88-1.18N m
• Applicable wire size 2.0mm² max.

• UVR controller outline dimensions, mm

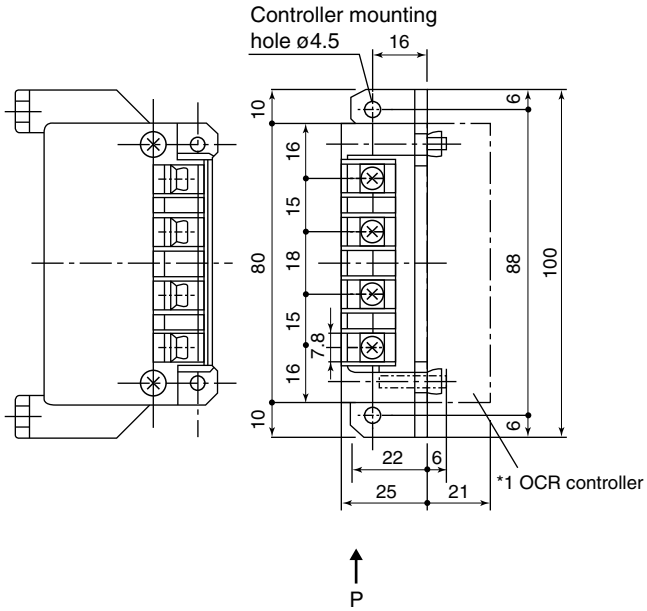

View from P

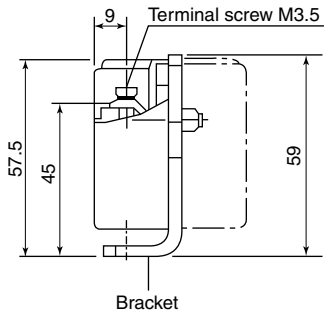

*1: For separate installation, install an OCR controller together with the UVR controller

Solid-state trip types
External accessories

■ Variation of external accessory

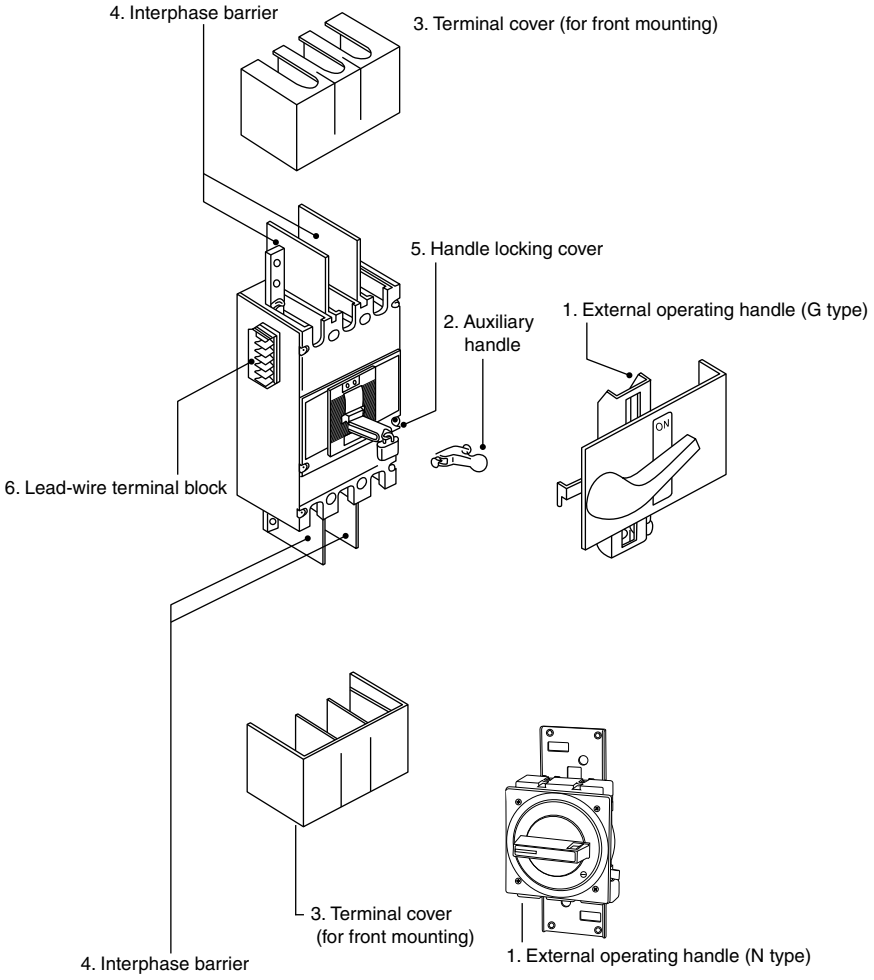

1. External operating handle
   Mounted on the control panel or switchboard to externally operate MCCB installed inside control panel or switchboard. The following 3 type handles are available.
   · Panel front mounted type (G type)
   The external operating handle is mounted on the control pane or switchboard doors.
   · MCCB mounted type (N type)
   This external operating handle is directly mounted to the MCCB installed inside the panels.

2. Auxiliary handle
   Reduce the required force to turn ON/OFF/RESET the MCCB.

3. Terminal cover (TB)
   Used to protect fingers touching live parts.
   · For front mounting MCCBs

4. Interphase barrier (B)
   The interphase barrier reinforces the insulation between terminals to prevent accidents.

5. Handle padlocking device (L)
   MCCB handles can be locked at either the ON or OFF position with this device. Prepare padlocks commercially available.

6. Lead-wire terminal block (A)
   MCCB side mounted lead-wire terminal block.

■ Operating handle (N type)

• The N type operating handle is directly mounted on the MCCBs.

KKD06-278

• N type

MCCB type	Type	Dust-proof packing
SA1003E, SA1004E SA1203E, SA1204E SA1603E, SA1604E	**BZ6N101C**	**BZ-NPC**

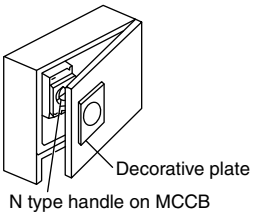

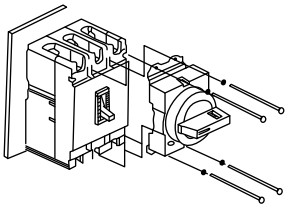

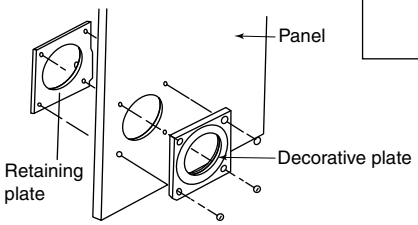

• Operating method

· The MCCB ON, OFF, and RESET operation can be made by turning the handle. When the MCCB trips, the handle moves to the TRIP position.
· If you turn the RELEASE screw with a screwdriver, the door can be opened while the MCCB is closed.
· The handle can be locked using a padlock to hold MCCB at either ON or OFF position. Prepare a commercially available padlock. Recommended padlock shackle size is ø3.5-6mm.

• Dimensions, mm

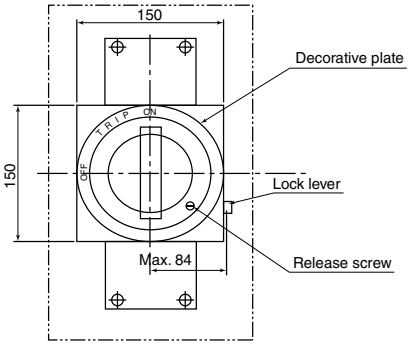

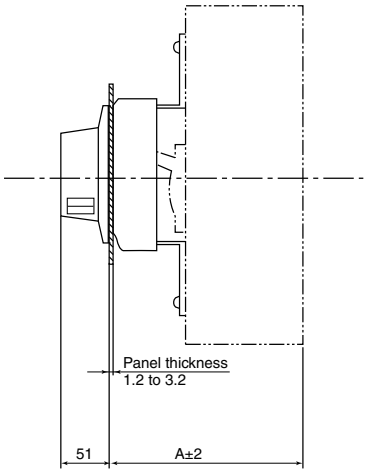

Panel door cutting

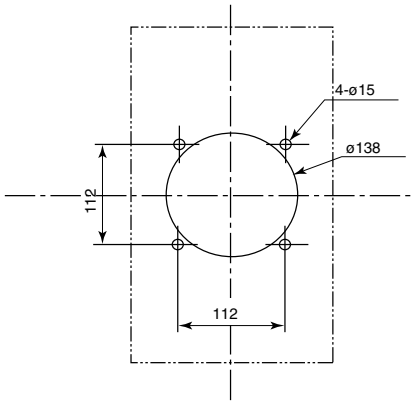

MCCB mounting dimensions

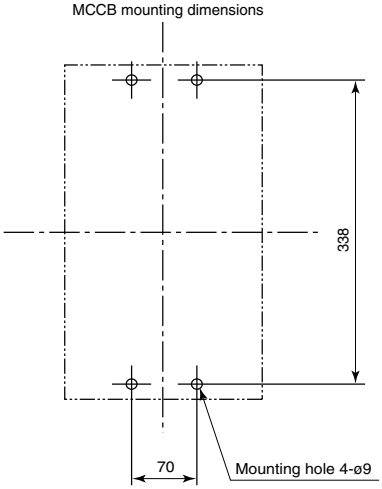

Operating handle position viewed from MCCB LOAD side

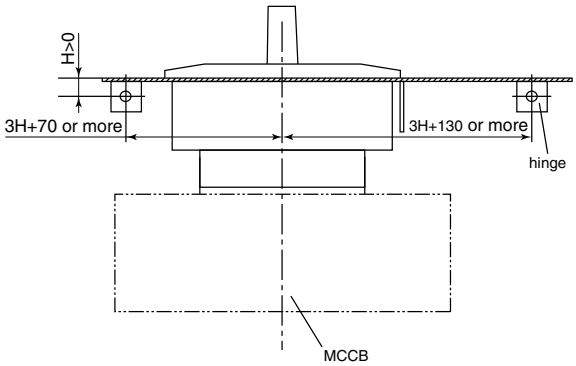

Applicable MCCB type	A
SA1003E, SA1004E SA1203E, SA1204E	197
SA1603E, SA1604E	217

■ Ordering information

Specify the type number.

■ Operating handle (G type)

• The G type operating handle is mounted on the panel front.

• G type

MCCB type	Type
SA1003E, SA1004E SA1203E, SA1204E SA1603E, SA1604E	**BZ6G101C**

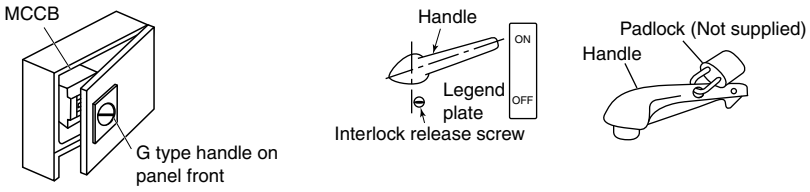

• Operating method

· The MCCB ON, OFF, and RESET operation can be made by turning the handle. When the MCCB trips, the handle moves to the TRIP position.
· If you turn the RELEASE screw with a screwdriver, the door can be opened while the MCCB is closed.
· The handle can be locked using a padlock to hold MCCB at OFF position. Prepare a commercially available padlock. Recommended padlock shackle size is ø8mm.

• Dimensions, mm

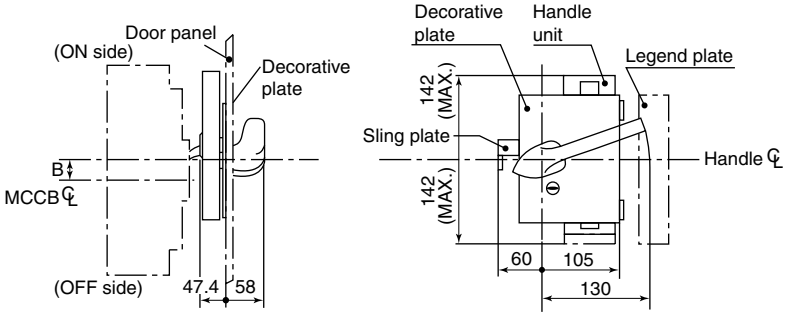

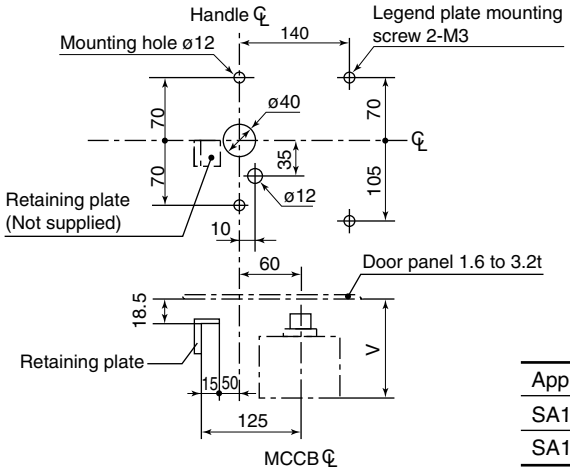

Applicable MCCB type	A	B
SA1000E, SA1200E	199.4	3
SA1600E	219.4	

■ Ordering information

Specify the type number.

■ Auxiliary handle

- Reduce the required force to turn ON/OFF/RESET the MCCB.
- One auxiliary handle is supplied with one MCCB as standard.

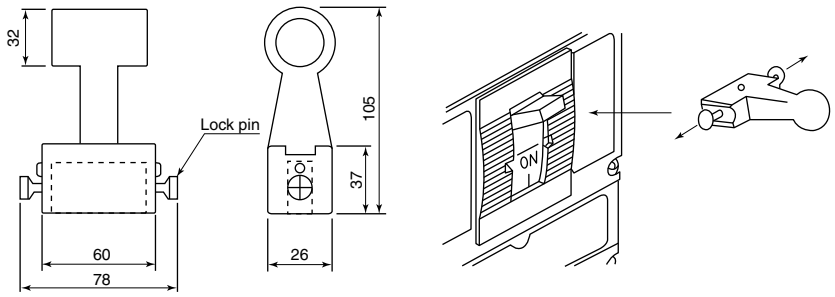

Attaching and removing handle
Pull out the lock pins on both right and left sides in the direction of the arrows, and put the auxiliary handle onto the handle of the MCCB. The auxiliary handle is fixed with spring force. When removing, pull out the lock pins the same way in the direction of arrows and take off the auxiliary handle.

Applicable MCCB type	Type
SA1003E, SA1004E SA1203E, SA1203E SA1603E, SA1603E	Supplied as standard

■ Handle padlocking device

- When the handle padlocking device is locked, the MCCB handle can be locked in the OFF (open) position.
- Use the commercially available padlocks with shackle of diameter 4-8mm.

Applicable MCCB type	Type
SA1003E, SA1004E SA1203E, SA1203E SA1603E, SA1603E	**BZ6L101C**

KKD06-275

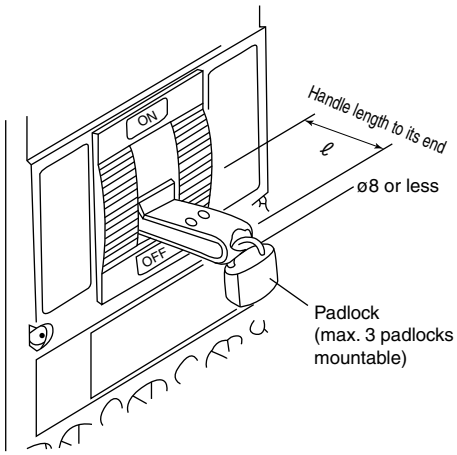

Use of handle padlocking device
Put the handle padlocking device's lock lever at UNLOCK (lock release) position and attach the padlocking device to the MCCB handle. Once the lock lever is turned to the LOCK (locked) position, the MCCB handle ON (closed) operation and OFF (open) operation are prohibited. When using the MCCB with the handle being locked, lock with the padlock(s) in this state.

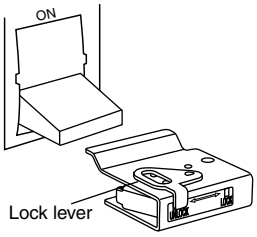

■ Ordering information

Specify the type number.

■ Terminal cover

• Finger protection guards against electric shock from accidentally touching live terminals.
• Specify when you order the main unit of the MCCB.

Applicable MCCB type	Type	Quantity supplied
SA1003E, SA1203E	**BZ6TB101C**	2 pieces
SA1004E, SA1204E		

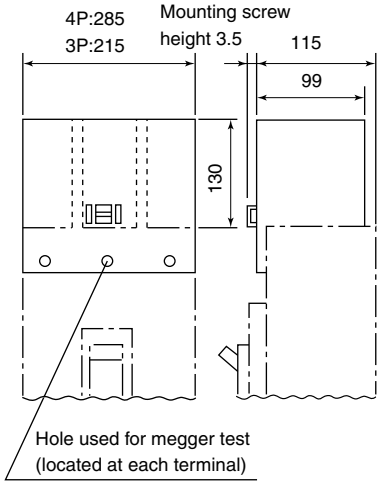

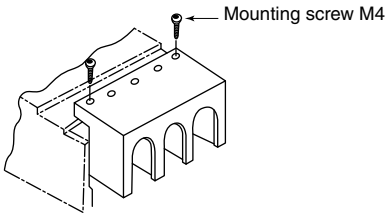

*1: Use wire of size 100m² or less. When using wire of 150mm², please cusult with Fuji.
*2: Not applicable to 3-pole MCCBs with terminal block (option)

■ Ordering information

Specify the type number.

■ Interphase barrier

• The interphase barrier reinforces the insulation between terminals to prevent accidents.

Applicable MCCB type	Type	Quantity supplied
SA1003E, SA1203E, SA1603E	**BZ6B101C3**	2 pieces
SA1004E, SA1204E, SA1604E	**BZ6B101C4**	3 pieces

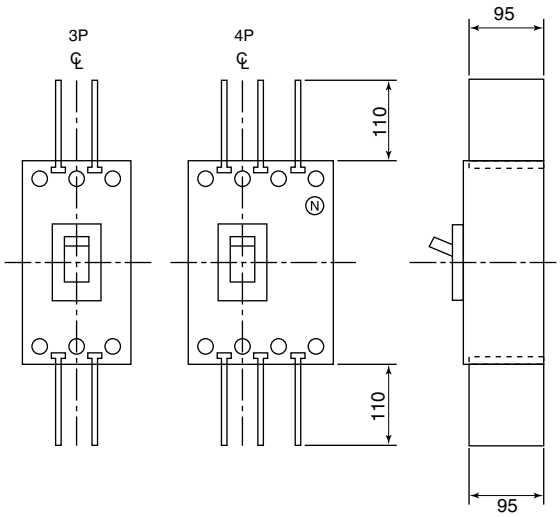

When mounting the interphase barrier to the MCCB, insert the barrier into the MCCB's groove from upward.

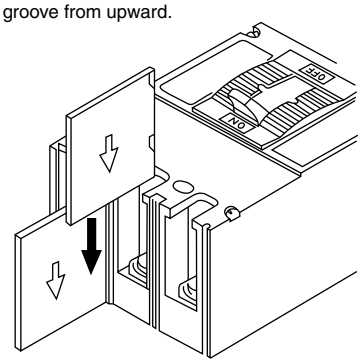

■ Ordering information

Specify the type number.

■ Lead-wire terminal block

The lead-wire terminal blocks are applicable to front-mounting or rear-mounting MCCBs with internal accessories. The lead-wire from internal accessories are already connected to terminals. One terminal block consists of 6 pairs of terminals. The mountable accessories are determined according to the types and quantity of internal accessories.

Mounting position and standard terminal arrangement

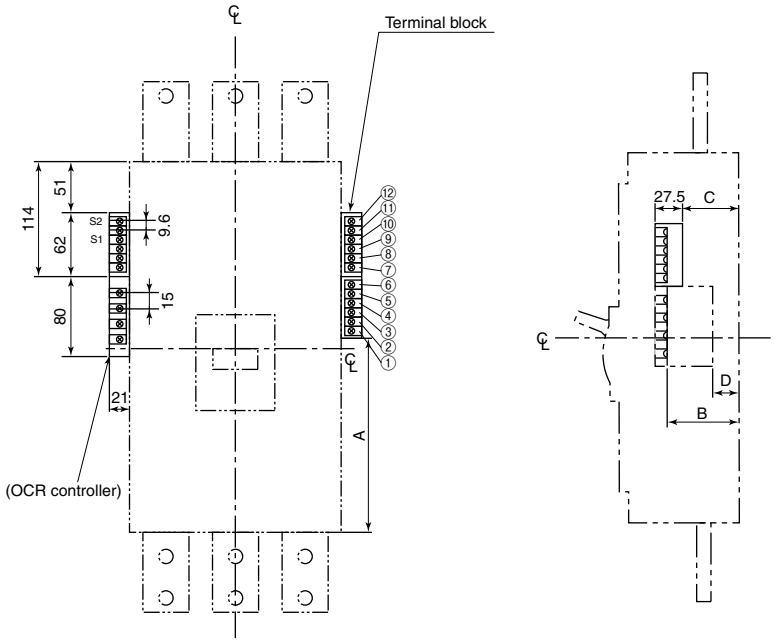

Indication	①	②	③	④	⑤	⑥	⑦	⑧	⑨	⑩	⑪	⑫
Terminal number	91	94	92	11	14	12	21	24	22			
Terminal symbol	ALc1	ALa1	ALb1	AXc1	AXa1	AXb1	AXc2	AXa2	AXb2	PALc	PALa	
Accessories	K			W1			W2					

Dimensions, mm

MCCB type	A	B	C	D
SA1003E, SA1203E	194	72	57	27
SA1004E, SA1204E	184	72	57	27
SA1603E	194	92	77	47
SA1604E	184	92	77	47

Notes: 1. Terminal screw M3.5
2. Terminal screw tightening torque 0.88-1.18N m
3. Applicable wire size 2.0mm^2 (Max.) x 2 wires

■ Ordering information

Specify the type number.

■ Operating characteristic

SA1000E

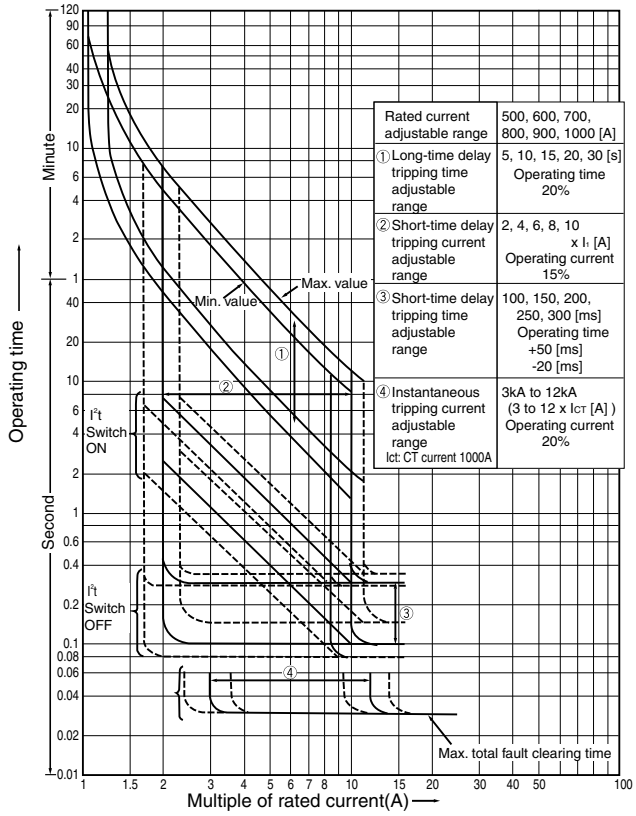

SA1200E

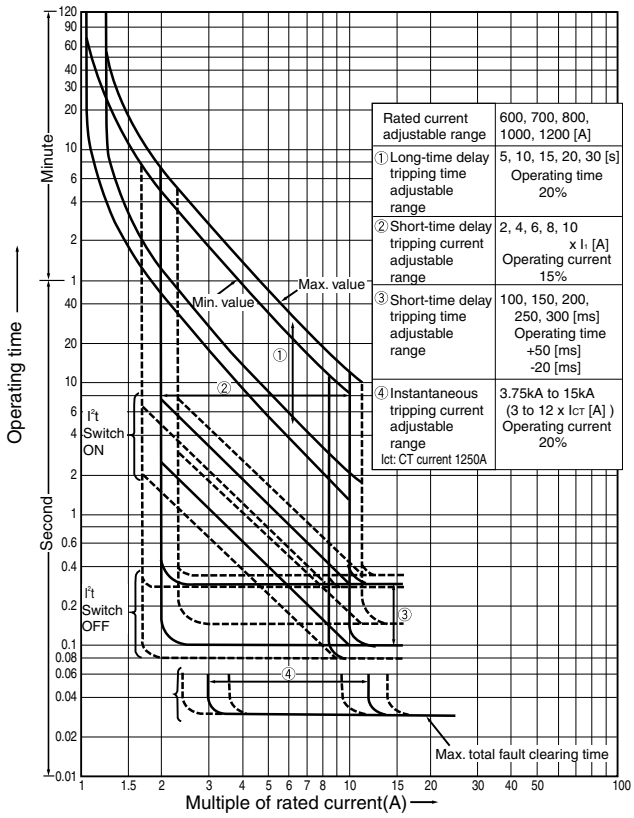

SA1600E

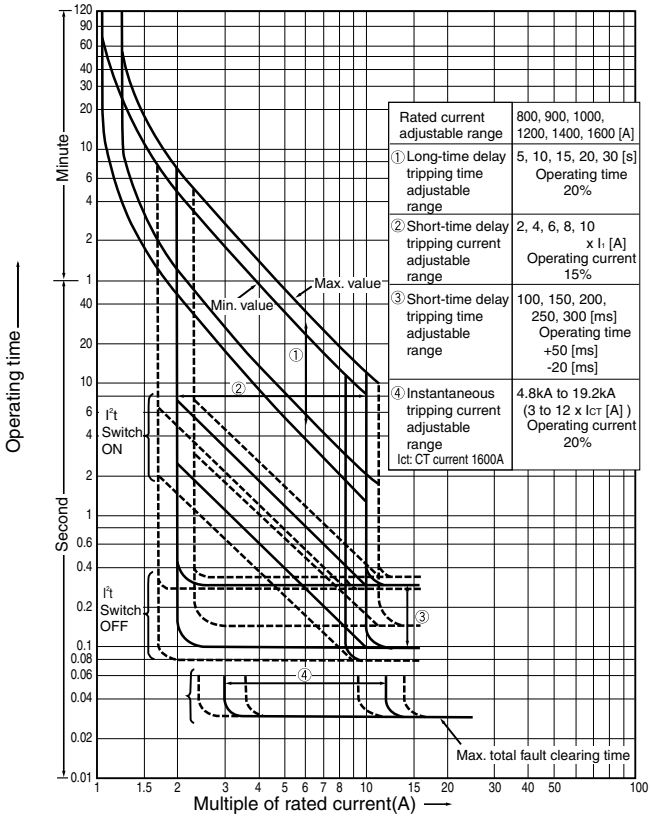

■ Dimensions, mm

SA1000E, 1200E

Front mounting, front connection

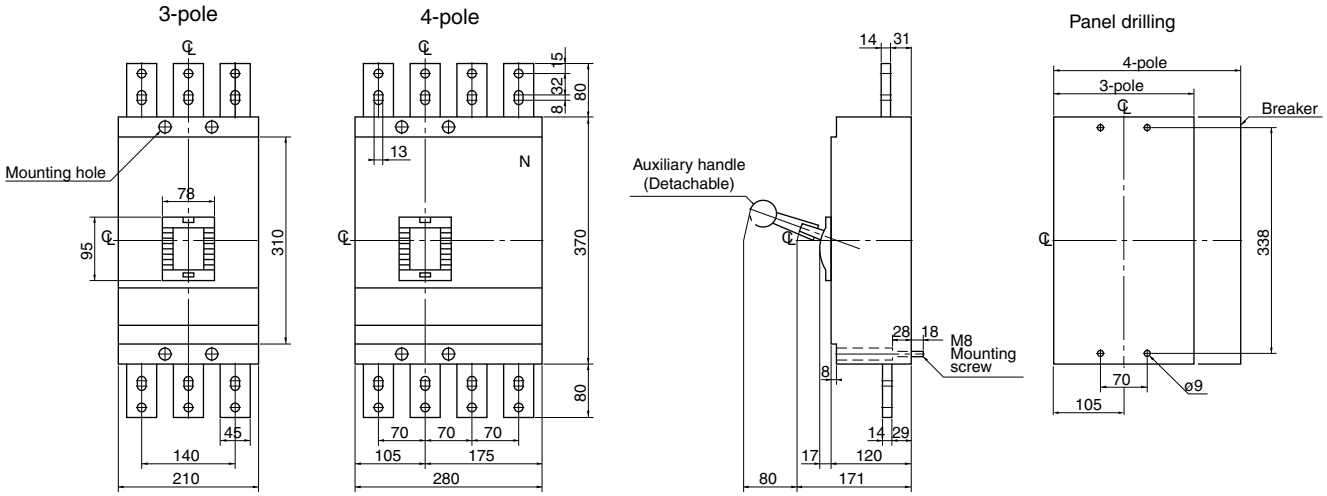

Front mounting, rear connection

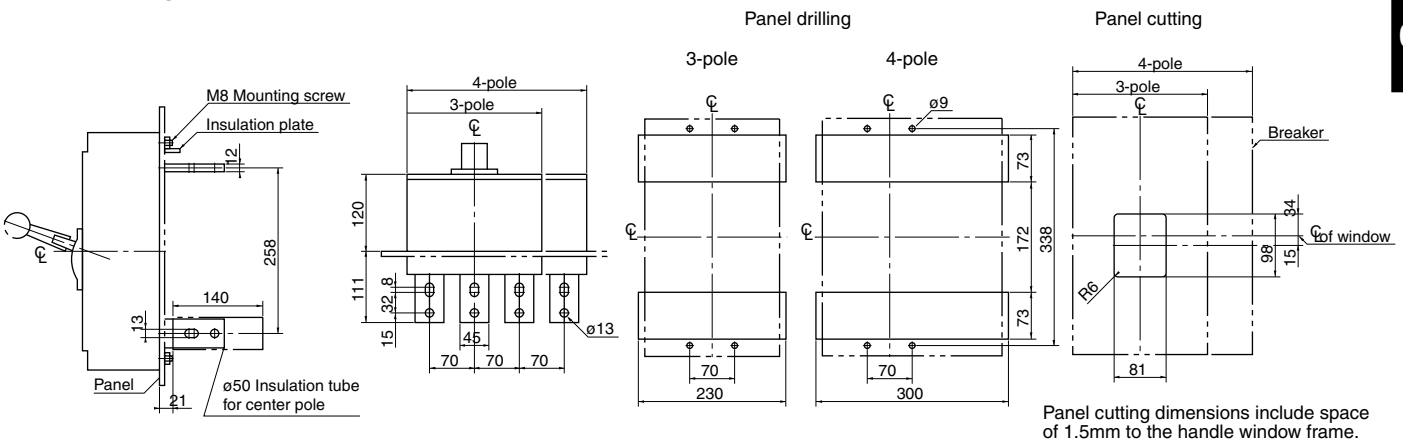

06

■ Dimensions, mm

SA1600E

Front mounting, front connection

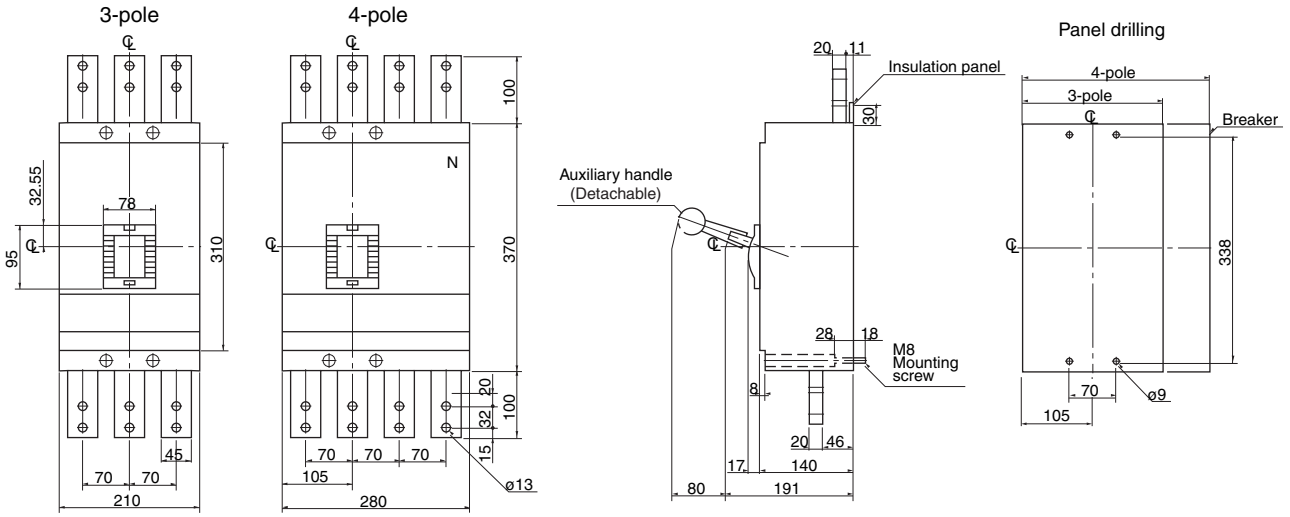

Front mounting, rear connection

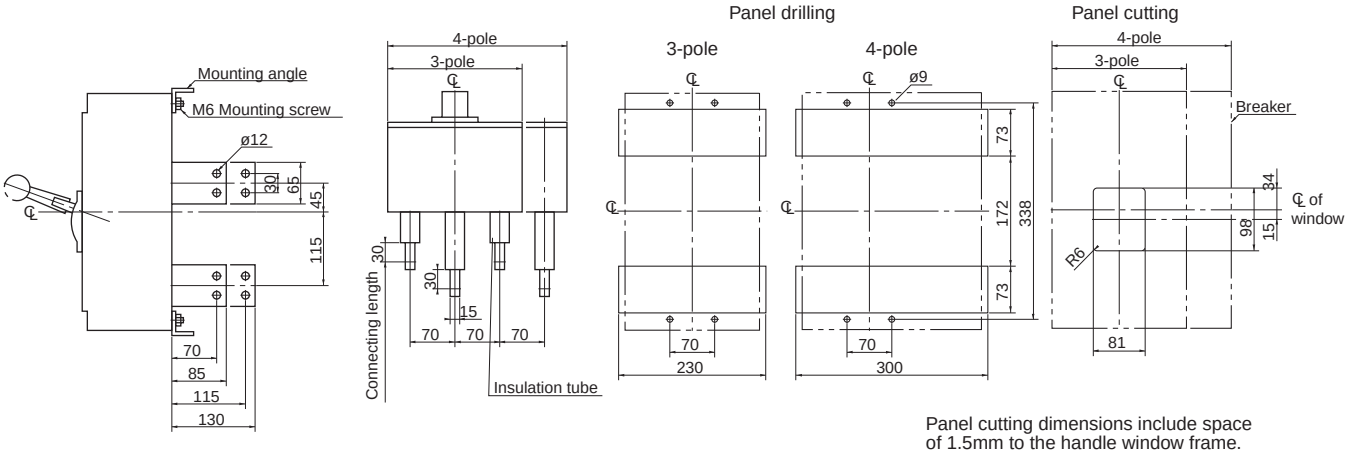

Panel cutting dimensions include space of 1.5mm to the handle window frame.

Distribution breakers: F series

■ Features

This breaker is used for protection of lighting and heating branch circuits.

- Compact and light in weight
- Large breaking capacity

Breaker ampere frame	Ampere rating	1-pole 240 volts AC Type	2-pole 240 volts AC Type	3-pole 240 volts AC Type
50	15	**F51B/15**	**F52B/15**	**F53B/15**
	20	**F51B/20**	**F52B/20**	**F53B/20**
	30	**F51B/30**	**F52B/30**	**F53B/30**
	40	**F51B/40**	**F52B/40**	**F53B/40**
	50	**F51B/50**	**F52B/50**	**F53B/50**
100	60	**—**	**F102B/60**	**F103B/60**
	75	**—**	**F102B/75**	**F103B/75**
	100	**—**	**F102B/100**	**F103B/100**

AF93-257
F51B

AF93-256
F52B

AF93-255
F53B

■ Ordering information

Specify the following:

1. Type number

■ Type number nomenclature

F 5 1B / 15

- 15 — Ampere rating (A)
- 1 — No. of poles
- 5 — Ampere frame
  5: 50A 10: 100A
- F — Basic type

■ breaking capacities

Type			Distribution breaker F51B	F52B	F53B	F102B	F103B
Short-circuit breaking capacity (kA)	JIS	265V AC	2.5	2.5	–	2.5	–
		220V AC	–	–	2.5	–	2.5
		110/220V AC	–	5	5	5.5	5.5
		110V AC	5	–	–	–	–
	BS	240/415V AC	3	3	–	–	–
		240V AC	3	3	3	3	3
Mass (kg)			0.18	0.35	0.55	0.41	0.65

■ Characteristic curves

F50B

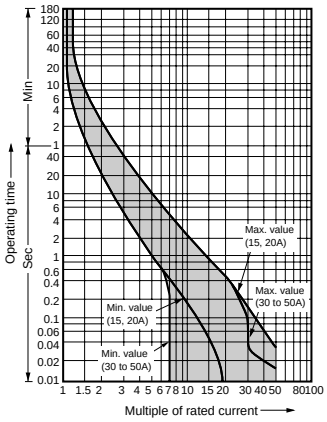

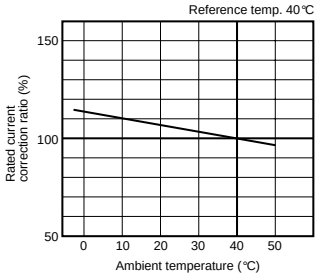

F100B

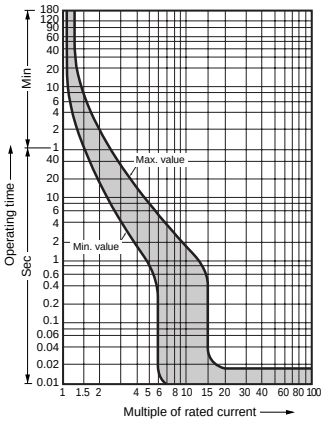

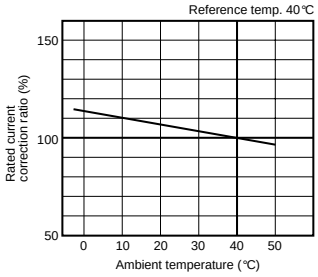

■ Dimensions, mm

F51B **F52B, F102B** **F53B, F103B**

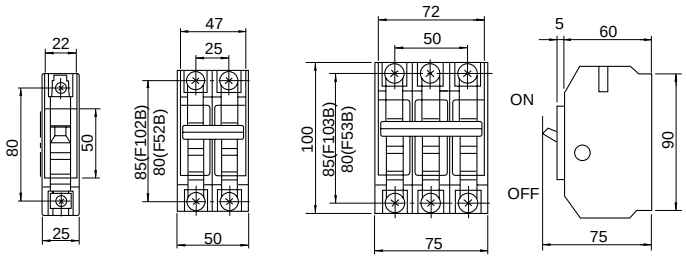

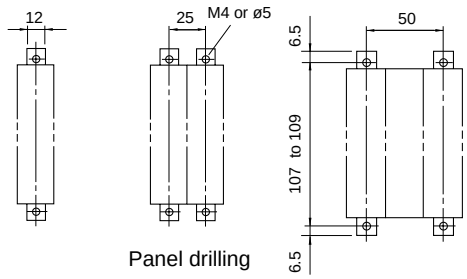

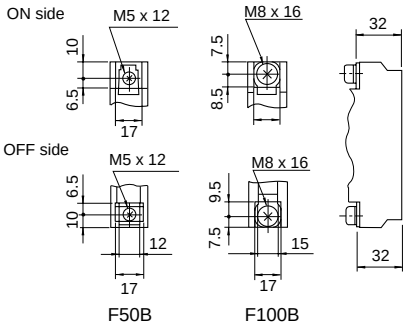

Air circuit breakers
DH series

■ Description

The newly designed DH series air circuit breakers have excellent features as follows:

- The height and depth dimensions are identical in all sizes up to 3200AF
- Incresed accessibility from the front enhances easy of installation, operation and maintenance
- No extra arc space required, This will assist in minimizing switchboard height and costs
- Very fast interruption by double break system
- Selective trip protective coordination functions

800A **2500A**

DH Series

■ Selection guide

Series			DH series
Frame size			800, 1250, 1600, 2000, 2500, 3200, 4000, 5000, 6300
No. of poles			3, 4
Installation	Fixed		Available (Up to 3200AF)
	Draw-out		Available
Closing mechanism			Manual spring, motor spring
Tripping mechanism			Shunt trip, undevervoltage trip
Overcurrent protection device	Characteristics	L-characteristic	Available
		R-characteristic	Available
	Protection function *	Long time delay Short time delay Instantanous	Available
		Pre-trip alarm	Available
		Ground fault	Available
		Preverse power	Available
		N-phase protection	Available
		Contact temp.monitoring	Available

* Availability of protective function differs depending on the OCR type.

■ Comparison of breaking capacity

Rated current (A)			800A	1250A	1600A	2000A	2500A	3200A	4000A	5000A	6300A
Rated breaking capacity (kA. sym.)/ Rated making current (kA. peak)	Rated voltage 690V AC	**DH□**	50/105				65/143		75/165	85/187	
		DH□H		55/121							
		DH□P			85/187						
	Rated voltage 440V AC	**DH□**	65/143				85/187		100/220	120/264	
		DH□H		80/176							
		DH□P			100/230						

■ Standards (Conform to the following standards)

•Conforming to
IEC60947-2
EN60947-2
AS3947-2
NEMA PUB No. SG3
ANSI C37.13
JIS C 8201-2-1
JEC 160

■ Standardized basic dimenstions

The height and depth dimensions are identical in all sizes to 3200A. There are four common widths or frame size, from 800-2000A , from 2500-3200A, 4000A and 5000-6300A for the standard series. The panel cutout size is the same for all types of DH series ACB, which makes it easy to arrange the ACBs in switchboards.
Maximum power from minimum volume was central to the design specification. With a depth of 290mm for the fixed type and 345mm for draw-out, it is one of the smallest ACBs in the world.
ACBs with front connections are available off-the-shelf.
Front connections are especially suitable for smaller-depth switchboards.

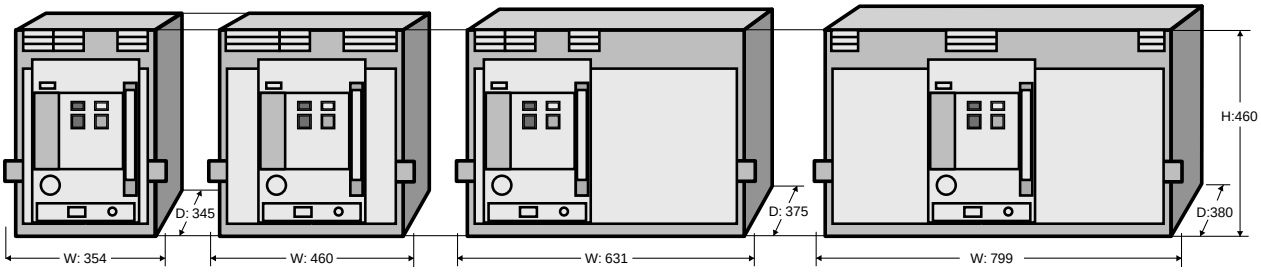

Standard type	800 to 2000A	2500 to 3200A	4000A	5000-6300A
High breaking type	1250 to 2000A	1600 to 3200A		

■ Geared toward the smallest depth in the world

Direct connection of the isolating main contacts to the hinges of the fixed main contacts eliminates the need for intermediate conductors. Allowing the DH series ACBs have the world's smallest depth resulting in space saving in switchboards.

More than twenty design patents have been registered for the DH series ACB.

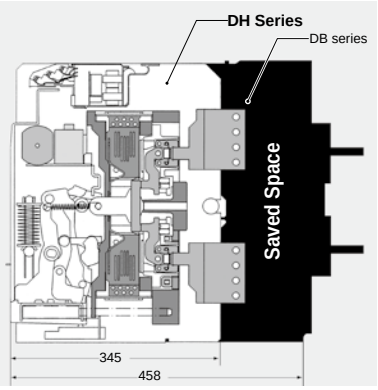

■ Increased accessibility from the front

It enhances ease of installation, operation, and maintenance.The double insulated design ensures that most accessories can be safely and easily installed by the user. Control, auxiliary and position switch terminals are mounted at the front on the ACB body for easy access. Due to the increased level of harmonics within the distribution network, the neutral phase is fully rated as standard.

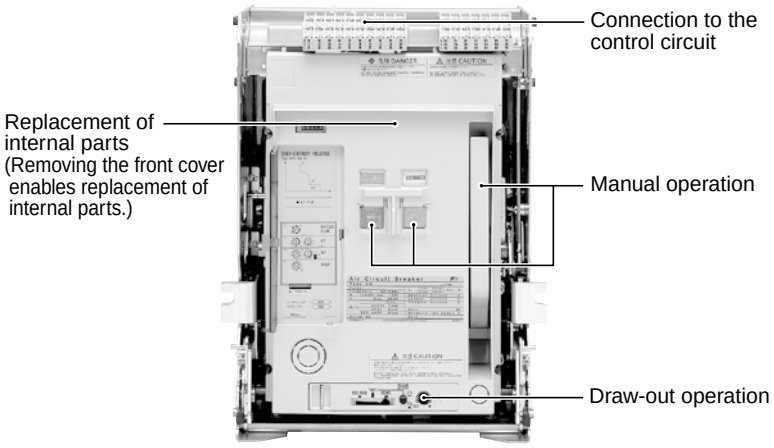

■ No extra arc space required, vertical stacking permitted

The DH series ACB dissipates all arc energy within its unique "Double Break" arc chamber.
The internal energy dissipation within the ACB allows the clearance distance of the ACB to nearby earthed metal to be zero. This will assist in minimizing switchboard height and costs.

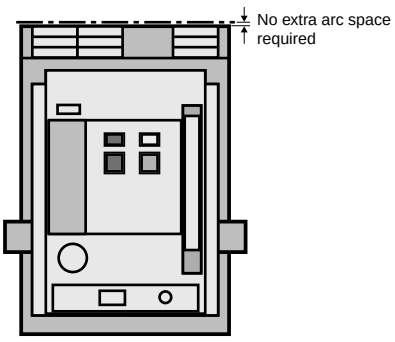

■ Very fast interruption by "Double Break" system

The unique "Double Break" main contact system ensures extremely fast interruption of short-circuit currents and substantially reduces main contact wear. The internally symmetrical "Double Break" structure allows reverse power connection.

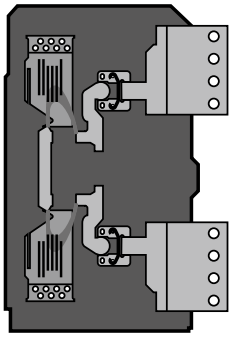

■ No clamp screws used for the main circuit contact units

There are no clamp screws or flexible leads in the main circuit contact units.
This substantially enhances the durability of the main circuit contact units and improves the reliability in ON-OFF operation.

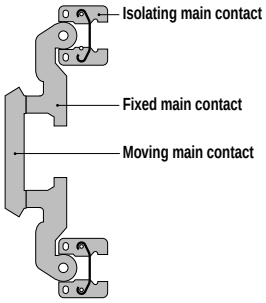

■ Enhanced selectivity

Fuji is so concerned about selectivity that all our protection relays have 'LSI' characteristics as standard.

This provides an adjustable time delay on overload (L) and also the I2t ramp characteristic (S).
As shown, these are essential to provide selectivity when grading with other protective devices such as downstream fuses and upstream relays.
The standard 'LSI' curve provides more than five million combinations of unique time current characteristics.
Zone selective interlocking is available to provide zero time delay selectivity.
As the rated breaking capacity is identical to the rated short-time withstand current full selectivity can be achieved.

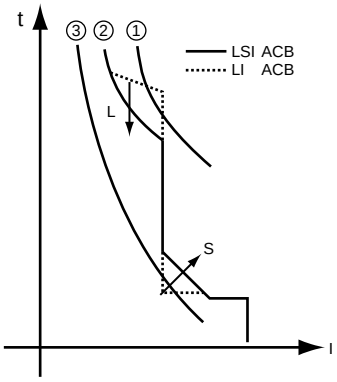

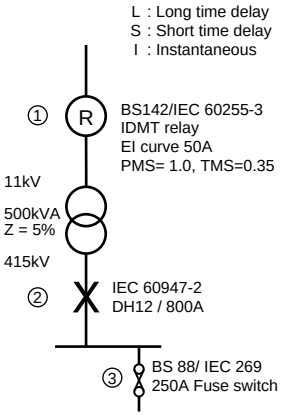

■ Replacement of the main contacts

The fixed and moving main contacts can easily be replaced in the field, thus prolonging the life on the circuit breaker.
Changing each pole takes around 15 minutes.

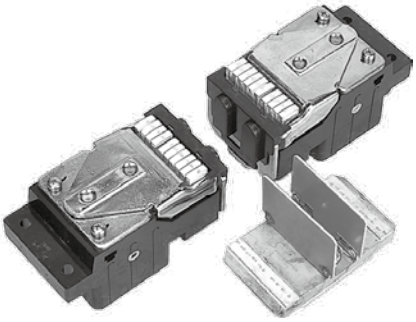

06

Performance	Type and rated current	DH08 800A DH12 1250A DH16 1600A DH20 2000A	DH12H 1250A DH16H 1600A DH20H 2000A	DH25 2500A DH30 3200A	DH16P 1600A DH20P 2000A DH25P 2500A DH30P 3200A	DH40 4000A	DH50 5000A DH60 6300A
Rated breaking current (at 400V AC)	**With INST trip unction** **With ST delay trip function** (Without INST trip/MCR function)	**65kA**	**80kA**	**85kA**	**100kA**	**100kA**	**120kA**
Rated short-time withstand current (for 1 sec.)							

Note: If the ACB is DH-H type or DH-P type without INST trip/MCR function, the rated breaking capacity will decrease down to the rated latching current.

■ DH seriesprovides positive protection for electric power systems.

DH series is equipped with an RMS sensing over-current release (OCR) having a wide range of protection functions and capabilities.

■ Optimum protective coordination

Why use a separate panel mounted protection relay when you can have all the benefits of I.D.M.T. protection integral to the ACB?

Fuji ACB is available with a choice of flexible protection curves to assist in selectivity applications.

All these curves are user definable and comply with IEC 60255-3. Standard transformer and generator protection characteristics are also available.

AGR-L Industrial & transformer protection
AGR-R Characteristics to IEC 60255-3
AGR-S Generator protection

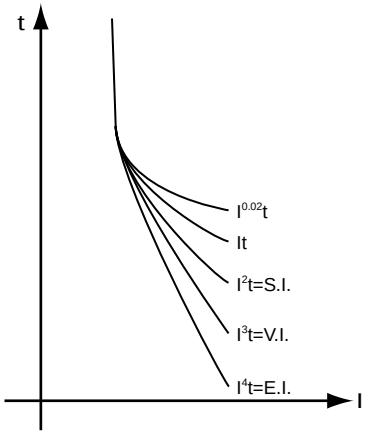

Inverse Definite Minimum Time (I.D.M.T.)
(S.I. Standard Inverse
V.I. Very Inverse
E.I. Extremely Inverse)

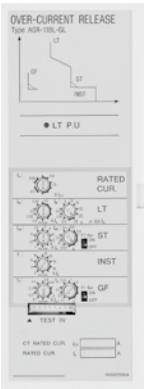

Standard OCR with adjustment dial Type AGR-11B

Standard OCR with LCD Type AGR-21B,22B

Enhanced OCR with LCD Type AGR-31B

■ Overload protection

Adjustable from 40-100% of rated current. True r.m.s detection up to the 19th harmonic, a distant vision for the competition who rarely see past the 7th. Neutral protection for all those Triple-N harmonics, such as 3rd, 9th and 15th. Also in case we forgot to mention, a "Thermal memory" as standard!

■ Two channel pre-trip alarm function (S-characteristic) *[1]

This function can be used to monitor and switch on additional power backup to feed critical circuits. For example, the function can be set so that when a pre-trip alarm is activated, an emergency generator starts to ensure a constant supply. This feature is only available on some AGR21 OCR models with a generator "S" characteristic.

■ N-phase protection function (optional)

In 3-phase, 4-wire systems that contain harmonic distortion, the 3rd harmonic may cause large currents to flow through the neutral conductor. The N-phase protection function prevents the neutral conductor from sustaining damage or burnout due to these large currents. Available in all OCRs except for generator "S" characteristic types.

■ Reverse power trip function(S-characteristic) *[1] (The first-ever feature for ACBs)

This feature provides additional protection when paralleling generators. The AGR21 OCR for generator protection with the reverse power trip function, negates the need for installation and wiring in an external reverse power relay. This feature is available using an AGR21 OCR with a generator "S" type characteristic only.

■ Ground fault trip function

This function eliminates external relays to provide a ground fault protection to TN-C or TN-S power distribution systems on the load side. Ground fault protection on the line side is also available as an option.

■ Reverse phase protection function

This function detects the negative-phase current occurring due to reverse phase or phase loss and precents burnout of a motor or damage to equipment.

■ Contact temperature monitoring function (optional) *[2]

This function monitors the temperature of the ACBs main contacts. An alarm indicates when the temperature exceeds 155C. Continuous monitoring of the contact temperature provides valuable input for preventative and predictive maintenance programs.

■ Advanced L.C.D display, Over Current Relay

The AGR-31B OCR comes standard with an LCD display. It can monitor and indicate phase currents, voltages, power, energy, power factor, frequency, and more.
For features, refer to page 06/185.

*[1]: Available for type AGR-22BS, 31BS.
*[2]: Available for type AGR-22B, 31B OCR.

■ Type number nomenclature

DH 08 3 H X - M 11BLAL F □

① Basic type

② Frame size

08:	800A
12:	1250A
16:	1600A
20:	2000A
25:	2500A
30:	3200A
40:	4000A
50:	5000A
60:	6300A

③ Number of poles

3:	3-pole
4:	4-pole

④ Breaking capacity class

Blank:	Standard
H:	High
P:	Super High

⑤ Installation

P:	Fixed (Up to 3200A)
X:	Draw-out with cradle
Q:	Draw-out with cradle & shutter

⑥ Closing mechanism

T:	Manual-spring
M:	Motor-spring ex. M = 100V DC

⑦ Overcurrent release device

11BLAL: Standard (LT, ST, INST/MCA)
11BLGL: Std. Plus GF
(For details, *see page 06/182*.)

⑧ Tripping device

F:	Shunt trip (AVR-1C) ex. F = 100V DC
R1:	Undervoltage trip/Instantaneous (AUR-1CS)
R2:	Undervoltage trip/500ms Time delay (AUR-1CD)

* If a capacitor extractor is used, the rated voltage of the voltage extractor is 48 V. Refer to page 06/177.

⑨Detailed specifications

Specify any additional requirements, such as international standards compliance, special environmental usage, or accessories, when ordering. Also clearly indicate the applicable standards, main circuit voltage, and breaking current. See the tables below.
ex. IEC 440V AC 65kA

Applied standard	Ordering code
IEC	IEC
EN	EN
AS	AS
NEMA	NEMA
ANSI	ANSI

Special environment specification	Ordering code
Tropical uses	Tropical
Extremely cold use storage -40℃ operating -25℃	Extremely cold
Anti-corrosion treatment	Anti-corrosion

Optional accessories	Ordering code
Auxiliary switch (4PDT)	Auxiliary switch (4PDT)
Auxiliary switch (10PDT)	Auxiliary switch (10PDT)
Auxiliary switch (7PDT) for general 4PDT, for low level circuits 3PDT	Auxiliary switch 4PDT + 3PDT
Auxiliary switch (10PDT) for general 7PDT, for low level circuits 3PDT	Auxiliary switch 7PDT + 3PDT
OFF (Open) padlock	OFF (Open) padlock
Automatic closing spring release device	Automatic closing spring release device
Capacitor trip device	AQR-1
Control circuit safety shutter	Control circuit safety shutter
Position switches	ALR-□P
Test jumper	Test jumper
Mis – insertion protection device	Mis – insertion protection device
Breaker fixing bolts	Breaker fixing bolts
Door interlock	Door interlock
Key lock	Key lock
Key interlock	Key interlock
Mechanical interlock	Mechanical interlock
Manual reset device	Manual reset device
IP55 cover	IP55 cover
Control circuit terminal cover	Control circuit terminal cover
Earthing device	Earthing device
Arc barrier	Arc barrier
Door flange	Door flange
Draw-out storage handle	Draw-out storage handle
Main circuit safety shutter	Main circuit safety shutter
Padlocking unit for main circuit safety shutter	Padlocking unit for main circuit safety shutter
Lifting plate	Lifting plate

External accessories	Ordering code
CT for neutral line 800 to 1600A frame	CW80-40LS
CT for neutral line 2000 to 4000A frame	EC160-40LS
Power transformer	TSE-30M
Lifter	AWR-1F (DH08 to DH30), AWR-2F (DH08 to DH40)
OCR checker	ANU-1

■ Specifications, standard types

Frame size		800A		1250A		1600A		2000A		2500A		3200A		4000A		5000A		6300A	
Basic type		**DH08□■**		**DH12□■**		**DH16□■**		**DH20□■**		**DH25□■**		**DH30□■**		**DH40□■**		**DH50□■**		**DH60□■**	
No. of poles *3 *4		3	4	3	4	3	4	3	4	3	4	3	4	3	4	3	4	3	4
Rated current (A) *1 *2 (Max.)	IEC, EN, AS, JIS	800		1250		1600		2000		2500		3200		4000		5000		6300	
	NEMA, ANSI	800		1250		1540		2000		2500		3200		3700		–		–	
Rated current of the neutral pole (A)		800		1250		1600		2000		2500		3200		4000		5000		6300	
Rated primary current of overcurrent tripping device (I_{CT}) (A) (For general feeder circuit use)		200 400 800		400 800 1250 1600		400 800 1250 1600 2000		400 800 1250		2500		3200		4000		5000		6300	
Rated insulation voltage (U_i) (V, 50/60Hz) *5		1000																	
Rated operational voltage (U_e)(V, 50/60Hz)*6		690																	
Rated breaking capacity (kA, sym.)/ Rated making current (kA, peak) IEC, EN, AS, JIS [I_{CS}=I_{CU}]	690V AC *7	50/105								65/143				75/165		85/187			
	500V	65/143								85/187				–		–			
	440V	65/143								85/187				100/220		120/264			
NEMA, ANSI	600V AC	42/96.6								50/115				65/149.5		–			
	480V	50/115								65/149.5				75/172.5		–			
	240V	65/149.5								85/195.5				100/230		–			
Installation																			
Fixed type **P**		●		●		●		●		●		●		–		–		–	
Draw-out type with cradle **X**		●		●		●		●		●		●		●		●		●	
Draw-out type with cradle and shutter **Q**		●		●		●		●		●		●		●		●		●	
Main circuit terminal connection																			
Fixed type	Vertical terminal	▲		▲		▲		❍		❍		❍		–		–		–	
	Horizontal terminal	❍		❍		❍		▲		▲		▲		–		–		–	
	Front terminal	▲		▲		▲		▲		▲		▲		–		–		–	
Drow-out type	Vertical terminal	▲		▲		▲		❍		❍		❍		❍		❍		❍	
	Horizontal terminal	❍		❍		❍		▲		▲		▲		–		–		–	
	Front terminal	▲		▲		▲		▲		▲		▲		–		–		–	
Rated impulse withstand voltage (U_{imp}) (kV)		12																	
Rated short time withstand current (I_{cw}) (kA, rms)	1 sec.	65								85				100		120			
	3 sec.	50								65				85		85			
Rated latching current (kA, rms)		65								85				100		120			
Total fault clearing time (s)		0.03														0.05			
Closing time (s) max.	Spring charging time	10																	
	Closing time	0.08																	
Dimensions(mm)																			
Fixed type 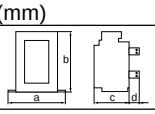	a	360	445	360	445	360	445	360	445	466	586	466	586	–	–	–	–	–	–
	b	460		460		460		460		460		460		–		–		–	
	c	290		290		290		290		290		290		–		–		–	
	d	75		75		75		75		75		75		–		–		–	
Drow-out type 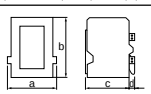	a	354	439	354	439	354	439	345	439	460	580	460	580	631	801	799	1034	799	1034
	b	460		460		460		460		460		460		460		460		460	
	c	345		345		345		345		345		345		375		380		380	
	d	40		40		40		40		40		40		53		60		60	
Mass (kg) For draw-out type X		73	86	73	86	76	90	79	94	105	125	105	125	139	176	200	260	220	285

Notes: ● Available – Not available
□ Replace the □ mark in the type number by the pole number code 3-pole: **3** 4-pole: **4**
■ Replace the ■ mark in the type number by the installation code Fixed: **P** Draw-out with cradle: **X** Draw-out with cradle and shutter: **Q**
❍ Standard ▲ Available on request

*1 At ambient temperature of 40°C.
*2 Rated current at standard terminal connection. See page 06/202 for other terminal connection.
*3 The 2-pole ACBs are similar to 3-pole types except that the center pole contacts and conductors are omitted.
*4 If there is no phase-N protections, an IT system cannot be used for a 4-pole breaker.
*5 1000V AC applies to IEC60947-2 and JIS C8201-2-1.
*6 690V AC applies to IEC60947-2 and JIS C8201-2-1.
*7 Cannot be used for an IT distribution system.

■ Specifications, high breaking types

Frame size		1250A		1600A		2000A		1600A		2000A		2500A		3200A	
Basic type		**DH12 □H■**		**DH16 □H■**		**DH20 □H■**		**DH16 □P■**		**DH20 □P■**		**DH25 □P■**		**DH30 □P■**	
No. of poles *3		3	4	3	4	3	4	3	4	3	4	3	4	3	4
Rated current (A) *1 *2 (Max.)	IEC, EN, AS	1250		1600		2000		1600		2000		2500		3200	
	NEMA, ANSI	1250		1600		2000		1600		2000		2500		3200	
	JIS	1250		1600		2000		1600		2000		2500		3200	
Rated current of the neutral pole (A)		1250		1600		2000		1600		2000		2500		3200	
Rated primary current of overcurrent tripping device (I_{CT}) (A) (For general feeder circuit use)		200 400 800 1250		1600		2000		200 400 800 1250 1600		2000		2500		3200	
Rated insulation voltage (U_i) (V, 50/60Hz) *4		1000													
Rated operational voltage (U_e)(V, 50/60Hz)*5		690													
Rated breaking capacity (kA, sym.)/ Rated making current (kA, peak) IEC, EN, AS, JIS [I_{CS}=I_{CU}]	690V AC	50/121						85/187							
	440V	80/176						100/220							
NEMA, ANSI	600V AC	42/96.6						50/115							
	480V	65/149.5						80/184							
	240V	80/184						100/230							
Installation Draw-out type with cradle **X**		●		●		●		●		●		●		●	
Draw-out type with cradle and shutter **Q**		●		●		●		●		●		●		●	
Main circuit terminal connection Drow-out type	Vertical terminal	❍		❍		❍		❍		❍		❍		❍	
	Horizontal terminal	▲		▲		▲		▲		▲		▲		▲	
	Front terminal	–		–		–		–		–		–		–	
Rated impulse withstand voltage (U_{imp}) (kV)		12													
Rated short time withstand current (I_{cw}) (kA, rms)	1 sec.	80						100							
	3 sec.	55						75							
Rated latching current (kA, rms)		65						85							
Total fault clearing time (s)		0.03													
Closing time (s) max.	Spring charging time	10													
	Closing time	0.08													
Dimensions(mm) Drow-out type	a	354	439	354	439	354	439	460	580	460	580	631	801	460	580
	b	460		460		460		460		460		460		460	
	c	345		345		345		345		345		345		345	
	d	40		40		40		40		40		40		40	
Mass (kg) For draw-out type X		79	94	79	94	79	94	105	125	105	125	105	125	105	125

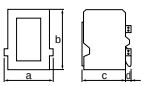

Notes: ● Available – Not available
□ Replace the □ mark in the type number by the pole number code 3-pole: **3** 4-pole: **4**
■ Replace the ■ mark in the type number by the installation code Draw-out with cradle: **X** Draw-out with cradle and shutter: **Q**
❍ Standard ▲ Available on request
*1 At ambient temperature of 40°C.
*2 Rated current at standard terminal connection. See page 06/202 for other terminal connection.
*3 The 2-pole ACBs are similar to 3-pole types except that the center pole contacts and conductors are omitted.
*4 1000V AC applies to IEC60947-2 and JIS C8201-2-1.
*5 690V AC applies to IEC60947-2 and JIS C8201-2-1.
• If the ACB is DH-H type or DH-P type without INST trip/MCR function, the rated breaking capacity will decrease down to the rated latching current.

■ **Appearance**
(Example of draw-out type equipped with full accessories)

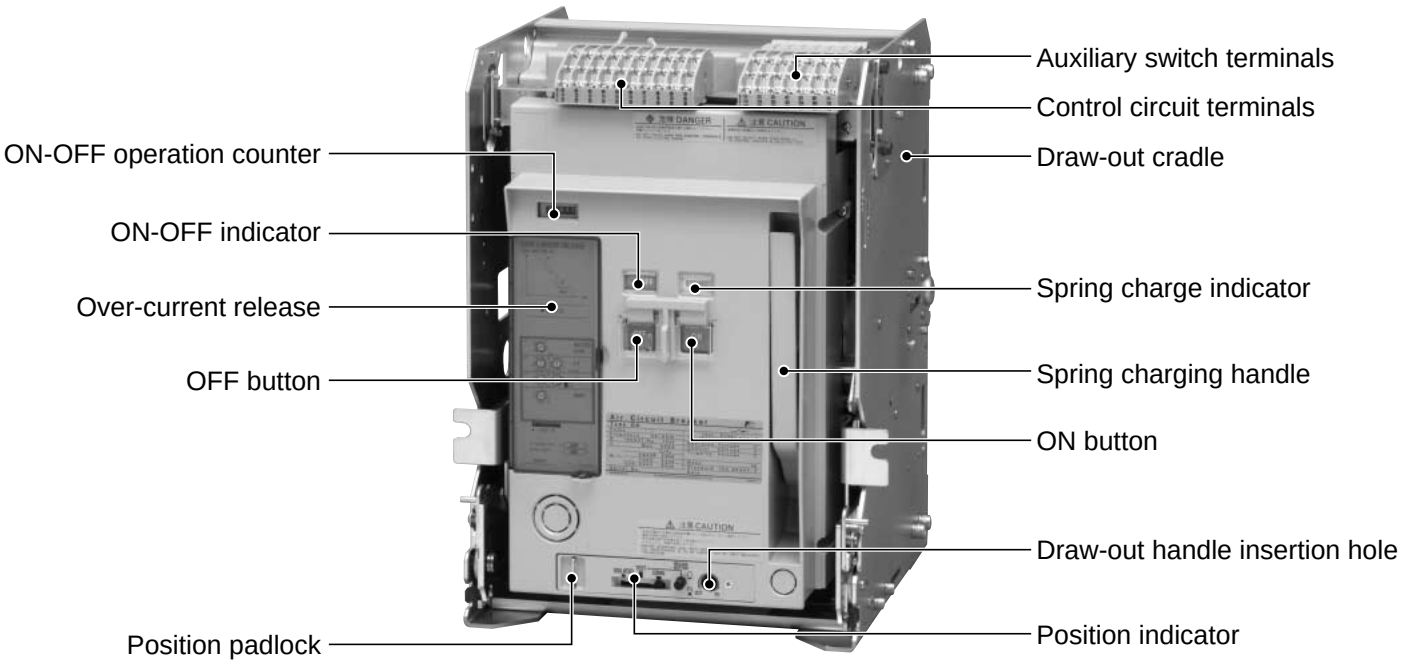

■ **Internal construction**

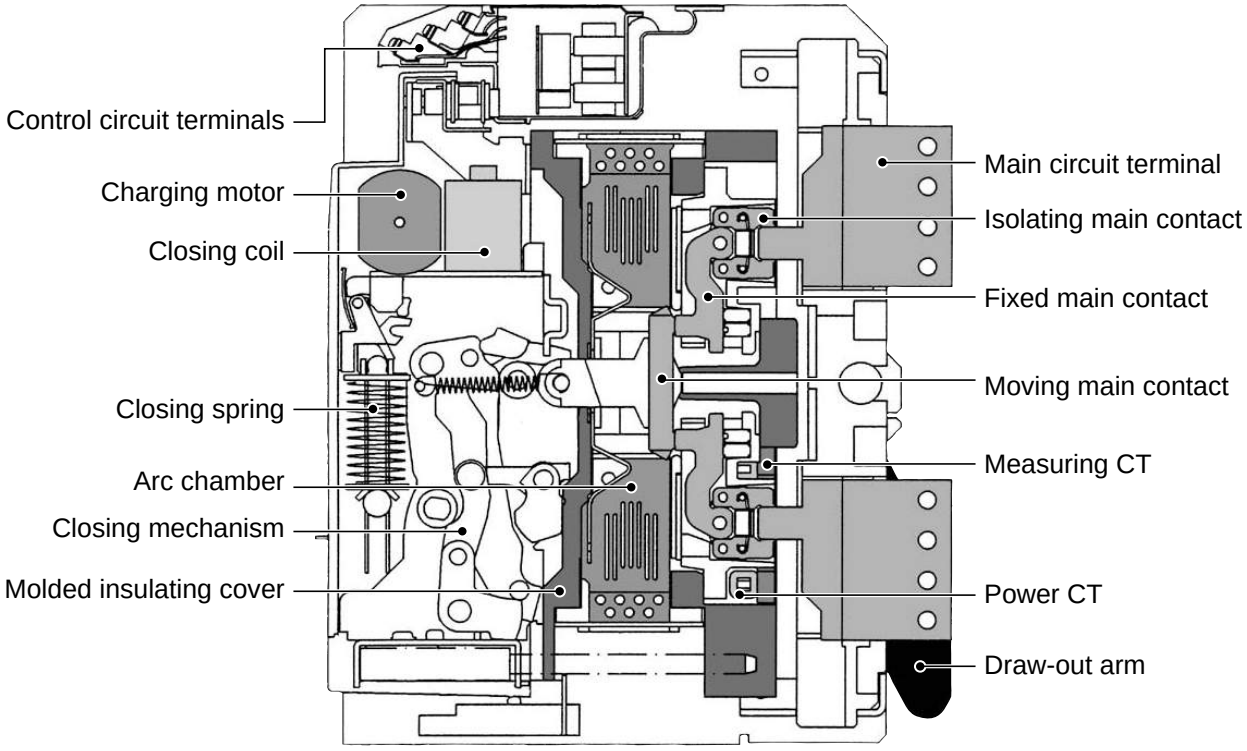

■ Mounting

• Draw-out type

This type of ACB consists of a breaker body and a draw-out cradle. The breaker body can be moved within or removed from the draw-out cradle that is fixed in the switchboard. There are four breaker body positions: CONNECTED, TEST, ISOLATED, and DRAW-OUT. The switchboard panel door can be kept closed in the CONNECTED, TEST, and ISOLATED positions ("shut-in three positions").

Note: On the position counter, an abbreviated form CONN is used instead of CONNECTED.

1. Connected position

Position indicator

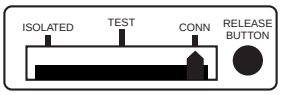

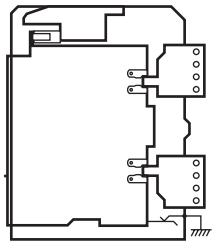

Both the main and control circuits are connected for normal service.

2. Test position

Position indicator

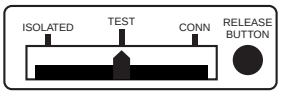

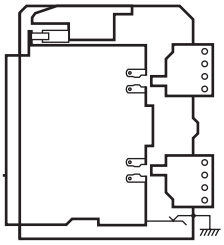

The main circuit is isolated and the control circuits are connected. This position permits operation tests without the need for opening the switchboard panel door.

3. Isolated position

Position indicator

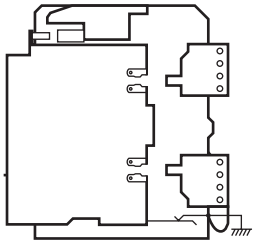

Both the main and control circuits are isolated.
The switchboard panel door does not need to be opened.

4. Draw-out position

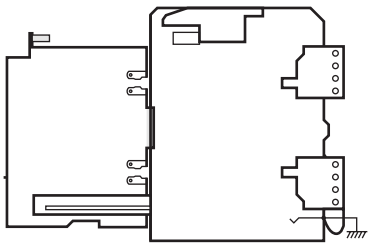

The breaker body is fully withdrawn from the draw-out cradle.

• Fixed type (standard series only)

This type of ACB has no draw-out cradle and is designed to be directly mounted in the switchboard.

■ Connection methods

• Main circuit terminals

Three(3) types of main circuit terminal arrangements are available: vertical terminals, horizontal terminals, and front connections. Different types of terminal arrangements can be specified for the line and load sides. Unless otherwise specified by the user, horizontal terminals are given to types DH08, DH12 and DH16 ACBs on both the line and load sides, and vertical terminals to DH20, DH25, DH30 and DH40. For DH40, only vertical terminals available. For High breaking series (H, P type), vertical terminals are standard and horizontal terminals are optional, and front connections are not available.
The breaker applicable maximum rated current derated depending on the connection method.

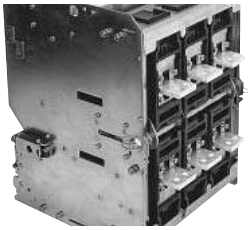

Horizontal terminals

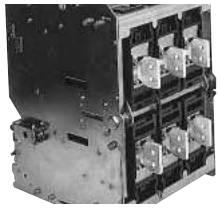

Vertical terminals

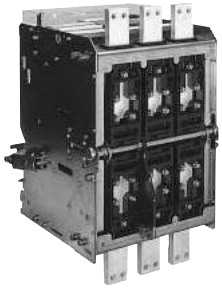

Front terminals

• Control circuit terminals

Control circuit terminals are front located to allow easy wiring/ access.

- The terminal blocks (for auxiliary switches, position switches, and control circuits) are positioned on the top of the ACB front panel and can be accessed from the front for wiring.
- M4 screw terminals are available.

Screw terminals

06

■ Closing method

With DH series ACB, there are two kinds of closing methods; manual charging type and motor charging type.

• Manual charging type

With manual charging type DH series ACB, the closing springs are charged manually by means of the spring charging handle. The ON/OFF operation of ACB is performed by ON/OFF buttons on the ACB.

- Charging the closing springs
  The closing springs are charged manually by pumping the spring charging handle.
- Closing the ACB
  Pressing the ON button on the ACB closes the ACB.
- Opening the ACB
  Pressing the OFF button on the ACB opens the ACB. The ACB cannot be closed as long as the OFF button is pressed.

• Motor charging type

With motor charging type DH series ACB, the closing springs are charged by a motor. The ON/OFF operation of ACB is performed remotely. The DH series ACB is also equipped with a manual charging mechanism to facilitate inspection. and maintenance work. The electronized control circuit promises optimum control to the charging of the closing spring and ACB ON/OFF operation.

- Charging the closing springs
  The closing springs are automatically charged by a motor. When the closing springs are released with the ACB turned on, they are automatically charged again by the motor in preparation for the next ON operation.
- Closing the ACB
  Turn on the remote ON switch to close the ACB. As the anti-pumping mechanism is equipped, even if the ON switch is turned on continuously, the ACB's closing operation is performed only once. When the ACB has to be closed again, turn off the ON switch to reset the anti-pumping mechanism, turn on the ON switch after the closing springs charge completed. If the ON and OFF signals are simultaneously given to the ACB, the ON signals are ignored.
- Opening the ACB
  To open the ACB remotely, use the shunt trip device *(see page 06/177)*, or the undervoltage trip device *(see page 06/178)*.

• Operation power supply

Rated voltage (V)	Applicable voltage range (V) CHARGE/ON operation	Applicable voltage range (V) OFF operation *1	Operation power supply ratings: Motor inrush current (peak) (A)	Motor steady-state current (A)	Closing command current (peak) (A)
100 AC	85-110		7	1.1	0.48
110 AC	94-121		7	1.1	0.39
120 AC	102-132		7	1.1	0.37
200 AC	170-220		4	0.7	0.24
220 AC	187-242		4	0.7	0.19
240 AC	204-264		4	0.7	0.18
24 DC	18-26		14	4	1.65
48 DC	36-53		10	1.6	0.86
100 DC	75-110		6	0.8	0.39
110 DC	82-121		6	0.8	0.37
125 DC	93-138		6	0.8	0.31
200 DC	150-220		4	0.5	0.19
220 DC	165-242		4	0.5	0.18

Note: *1 For the ratings of the shunt trip device, *see page 06/177*.

• Step-down transformer (separately installed)

The maximum rated voltage applicable to the operation power supply is 240V AC. If higher voltage has to be applied, a step-down transformer is needed. The following step-down transformers are available as options.

Rated control voltage	Transformer: Type	Capacity	Voltage ratio
410-470V AC	TSE-30M	300VA	450/220V
350-395V AC	TSE-30M	300VA	380/220V

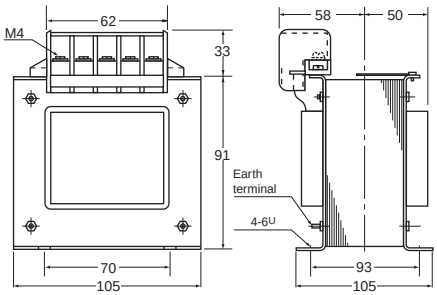

■ Tripping devices

• Continuous rating shunt trip device

The continuous-rating shunt trip device allows the ACB to be opened when an external protection relay against overcurrent or reverse power is activated.
Because of its continuous rating, the device can also be used to provide an electrical interlock to the ACB.
When an AGR-11 OCR is fitted or no OCR is fitted, continuous rating shunt trip and undervoltage trip can not be fitted to the same ACB.

Shunt trip rating (Continuous rating type)

Type	Rated voltage (V)	Operational voltage (V)	Peak excitation current (A)	Normal current (A)	Opening time (max.) (ms)
AVR–1C	100 AC	70–110 AC	0.48	0.32	40
	110 AC	77–121 AC	0.39	0.26	
	120 AC	84–132 AC	0.37	0.24	
	200 AC	140–220 AC	0.24	0.16	
	220 AC	154–242 AC	0.19	0.13	
	240 AC	168–264 AC	0.18	0.12	
	24 DC	16.8–26.4 DC	1.65	1.1	
	48 DC	33.6–52.8 DC	0.86	0.57	
	100 DC	70–110 DC	0.39	0.26	
	110 DC	77–121 DC	0.37	0.25	
	125 DC	87.5–137.5 DC	0.31	0.21	
	200 DC	140–220 DC	0.19	0.13	
	220 DC	154–242 DC	0.18	0.12	

• Capacitor trip device

In using with the continuous rating shunt trip device, the capacitor trip device can be used to trip the ACB within a limited period of 30 sec if large voltage drop occurs due to an power (AC) failure or short-circuit.
The rated voltage of the voltage extractor must be 48 V DC.
When the continuous rating shunt trip device is used with capacitor trip device, “NO” contact of auxiliary switch of ACB should be connected in series, otherwise, the internal damage may occur.
Operation check using test jumper is not allowed.

Capacitor trip rating

Type	AQR-1
Rated voltage	100-120V AC
Operatiional voltage range	70 to 110% of rated voltage
Rated frequecy	50/60Hz
Rated voltage of shunt trip used	48V DC
Power consumption	100VA

06

Control circuit

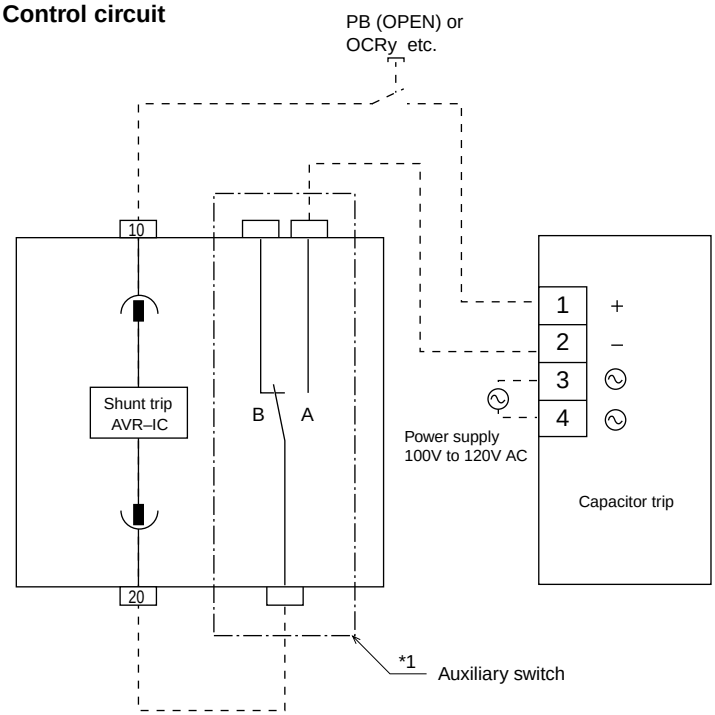

- - - - - - - - User Wiring

*1: Use auxiliary switch for capacitor trip

Dimensions, mm

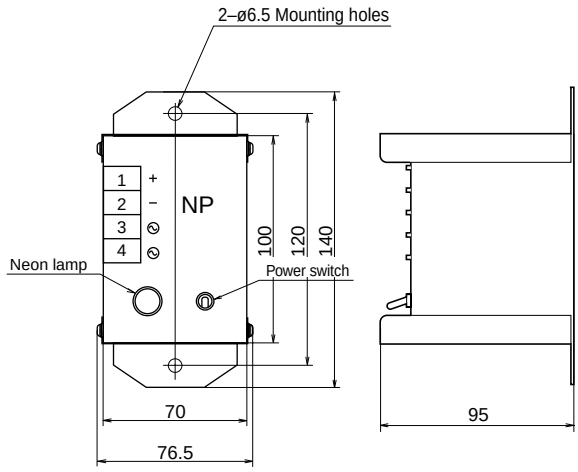

• Undervoltage trip device (UVT)
The undervoltage trip device (UVT) trips the ACB when the control voltage drops below the opening voltage. When the control voltage is restored to the pick-up voltage, the ACB can be closed. The pick-up voltage is fixed to 85% of the rated voltage.
The UVT consists of a tripping mechanism and an undervoltage trip control device. The trip control device is available in two types: AUR-ICS and AUR-ICD.
Type AUR-ICS provides an instantaneous trip to the ACB when the control voltage drops below the opening voltage.
Type AUR-ICD provides a delayed trip to the ACB when the control voltage remains below the opening voltage for at least 500 ms.
Adding a pushbutton switch (with normally opened contacts) between terminals 24 and 30 allows the ACB to be tripped remotely.
The undervoltage trip device is builtin the ACB unit.

AC undervoltage trip control circuit

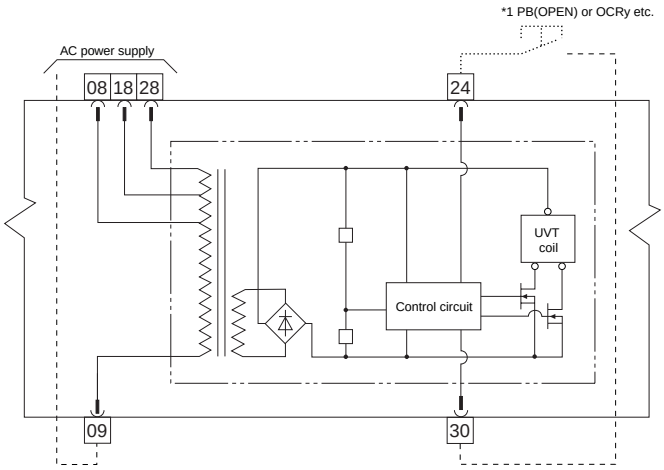

*1 Tripping signal is 48 VDC/5 mA.
Apply tripping signal for at least 80 ms.

Undervoltage trip Ratings

Type of UVT Control Device	RatedVoltage 50/60Hz (V)	Opening Voltage (V)	Pick-up Voltage (V)	Coil Excitation Current (A)	Power Consumption (VA)	
					Normal	Reset
AUR-1CS	100 AC	35 – 70	85			
AUR-1CD	110 AC	38.5 – 77	93.5			
	120 AC	42 – 84	102			
	200 AC	70 – 140	170			
	220 AC	77 – 154	187			
	240 AC	84 – 168	204	0.1	8	10
	380 AC	133 – 266	323			
	415 AC	145 – 290	352			
	440 AC	154 – 308	374			
	24 DC *	8.4 – 16.8	20.4			
	48 DC *	16.8 – 33.6	40.8			
	100 DC *	35 – 70	85			

*Available soon. Contact Fuji for the details.

■ Overcurrent trip device (OCR)

The AGR series of overcurrent trip device (OCR) featuring high reliability and multiple protection capabilities is available for DH series. Controlled by an internal 8-bit microprocessor, the OCR provides reliable protection against overcurrent.
The OCR range is divided into three groups: L-characteristic, R-characteristic (both for general feeder) and S-characteristic (for generator protection).
Each group consists of:
Type AGR-11B : Standard OCR with adjustment dial
Type AGR-21B, 22B : Standard OCR with L.C.D.
Type AGR-31B : Enhanced OCR with backlit L.C.D.
Optional protection functions of the OCR include those against ground fault, earth leakage, undervoltage and reverse power.
Pre-trip alarm function can also be installed.

• Types of tripping functions

1. Adjustable long time-delay trip function (LT)
Effectctive value (RMS) detection used to accurately read through distorted waveforms.
In addition to the standard L and S-characteristics, the R-characteristic is available in five types for long time-delay trip. The R-characteristic can be used to give selective tripping coordination with e.g., fuses. (*See page 06/170.*)

Hot-start mode (applicable to L-characteristic of AGR-21B, 31B)
In the hot-start mode, when overcurrent occurs in a load state, the circuit breaker operates in a shorter amount of time as compared with operation in the cold-start mode. The hot-start mode is suitable to protect motors and wires from thermal damage. The cold-start is set at factory default.

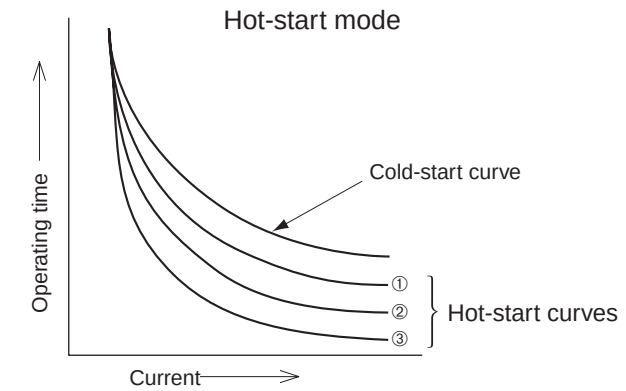

①When the OCR is set to start operation at 50% of the rated current, its operating time in HOT start mode is approx. 80% of that in COLD start mode.
②When the OCR is set to start operation at 75% of the rated current, its operating time in HOT start mode is approx. 60% of that in COLD start mode.
③When the OCR is set to start operation at 100% of the rated current, its operating time in HOT start mode is approx. 20% of that in COLD start mode.

2. Adjustable short time-delay trip function (ST)
Ramp characteristic has been provided in addition to definite time-delay trip characteristic. The ramp characteristic gives coordinative protection with downstream circuit breakers or fuses properly. In type AGR-L and AGR-R OCRs, the definite time characteristic is activated when the load current is 1000% or more of the rated current [In] (500% or more of the rated current [In] for AGR-S). The definite time-delay trip characteristic and ramp characteristic are selectable with a switch. The ST trip function is set to the definite time-delay trip characteristic at factory shipment.

Ramp characteristic curve
(L or R-characteristic)

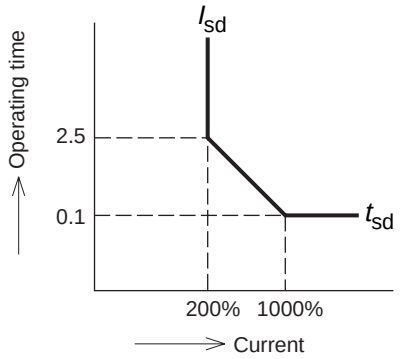

3. Adjustable instantaneous trip function (INST/MCR)
The INST trip function trips the ACB when the short circuit current exceeds the pickup current setting, irrespective of the state of the ACB.
The making current release (MCR) trips the ACB when the short circuit current exceeds the pickup current setting during closing operation. After the ACB is closed, the MCR is locked and kept inoperative.
The INST and MCR are switch-selectable for AGR-21B, 22B and 31B. (AGR-11B is INST only, MCR is not selectable.)
Note) The MCR needs the control power. If the control power is lost, the MCR provides the INST trip function only.

4. Adjustable pre-trip alarm (PTA)
The pre-trip alarm function provides an alarm signal via the alarm contact (1NO-contact) when the load current exceeding a predetermined value lasts for a predetermined time. A 2 -channel pre-trip alarm function is available for S-characteristic. This function can be used to adjust feeding to loads according to their priority.
The pre-trip alarm is automatically reset when the load current drops to the predetermined value.
Note that this function needs the control power.

5. Ground fault trip function (GF)
The peak value sensing is used (the residual current of each phase is detected).
The GF pickup current can be set between 10% and 100% of the CT rated primary current [I_{CT}].

<Ramp characteristic is added>
The ramp and definite time characteristics are switch selectable. The GF trip function comes into operation with the definite time characteristic when the load current reaches 100% or more of the CT rated primary current [I_{CT}].
The GF trip function is factory set to the definite time characteristic.
When using a 3-pole ACB in a 3-phase, 4-wire system, be sure to use an optional CT for neutral line. (*See page 06/196.*)

Note 1: The GF trip function comes usually with operation indications (LED and contact output). If you need nothing but ground fault indication without a ground fault tripping operation, specify at the time of ordering.
Note 2: Restricted and unrestricted ground fault protection REF is available as option. This enables to protect against ground fault on the line side of ACB.

6. Reverse power trip function (RPT)
(For AGR-22B and AGR-31B only)
The RPT function protects 3-phase generators running in parallel against reverse power. The RPT pickup current can be set in seven levels: 4% through 10% of the generator rated power.
If the rated main circuit voltage exceeds 250 VAC, a step-down power transformer is needed. When ordering the ACB, state the step-down ratio of the transformer you will use.

7. N-phase protection function (NP)
This NP function is available on 4-pole ACBs and prevents the neutral conductor from suffering damage or burnout due to overcurrent.
The NP trip pickup current can be set between 40% and 100% of the OCR rated primary current for L and R-characteristics or of the generator rated current for S-characteristic.
It is factory set to a value specified at the time of ordering.

Note 1: The NP trip function comes usually with operation indications (LED and contact output). The NP trip pickup current setting is shared by the LT trip function.
Note 2: The HOT start mode is available for AGR-21B and AGR-31B. The operating time for the NP trip function is linked to that for the LT trip function.

8. Undervoltage alarm function (UV)
(For AGR-22B and AGR-31B only)
This function monitors the main circuit voltage, and gives an alarm on the LCD and an output signal via an alarm contacts when the voltage drops below the setting voltage.
The alarm is activated when the main circuit voltage drops below the setting voltage (selectable from 40%, 60% or 80% of the rated main circuit voltage [Vn]), and is deactivated when the main circuit voltage rises to the recovery setting voltage (selectable from 80%, 85%, 90% or 95% of the rated main circuit voltage [Vn]).
If the rated main circuit voltage exceeds 250 VAC, a step-down power transformer is needed. When ordering the ACB, state the step-down ratio of the transformer you will use.

Note 1: The undervoltage alarm function is disabled unless the main circuit voltage has once risen to the recovery setting voltage or higher.
Note 2: If the undervoltage alarm function is used in conjunction with the undervoltage trip device (see page 06/178), an alarm may occur after the ACB trips open depending on the alarm setting voltage.

9. Contact temperature monitoring function (OH)
(For AGR-31B only.)
The HEAT function prevents the ACB from suffering damage due to overheat.
It monitors the temperature of the ACB main contacts, and gives an alarm on the LCD and an output signal via the alarm contact (1NO-contact) when the temperature exceeds 155°C.
The alarm can be manually reset when the temperature drops to a normal temperature.
If you want to set the threshold temperature to a lower value, contact Fuji.
This function needs the control power.

Note 1: "Alarm" or "Trip" can be selected.

10. Reverse phase protection function (NS)
(For AGR-21B and AGR-31B only)
This function detects the negative-phase current occurring due to reverse phase or phase loss and prevents burnout of a motor or damage to equipment. The protection setpoint ranges from 20% to 100% of the main circuit rated current [In].

11. Zone interlock (Z)
(For AGR-22B and AGR-31B only)
The zone-selective interlock capability permits tripping of the ACB upstream of and nearest to a fault point in the shortest operating time, irrespective of the short time delay trip time setting, and minimizes thermal and mechanical damage to the power distribution line.

• NON setting and fail-safe feature
1. NON setting
Setting a trip pickup current setting dial to the NON position allows you to render the corresponding protection function inoperative.
Dials having the NON position include LT, ST, INST/MCR, and GF.
Appropriate NON setting will be a useful means for optimum selectivity.

2. Fail-safe feature
The OCR has a fail-safe mechanism in case setting dials are improperly set to the NON position.
- If the ST and INST trip pickup current setting dials are both set to NON, the fail-safe mechanism will activate the INST trip function to trip the ACB when a fault current equal to or more than 16 times the rated current [I_n] flows through the ACB.
- If the ST and MCR trip pickup current setting dials are both set to NON, the fail safe mechanism will activate the ST delay trip function to trip the ACB when a fault current equal to or more than 10 times (5 times for generator protection) the rated current [I_n] flows through the ACB.

• Field test or facility
Type AGR-21B/22B/31B OCRs are equipped with a field test function to verify the long time delay, short time delay, instantaneous and ground fault trip features without the need for tripping of the ACB.
To check type AGR-11B, use the type ANU-1 OCR checker (optional).

● Operation indication function

1. Indication via single contact (AGR-11B)

When the LT, ST, INST/MCR, or GF trip function is activated, an output is generated via 1NO-contact.
The 1NO-contact will turn off after 40ms or more.
A self-hold circuit is needed.

2. Indication via individual contacts (AGR-21B, 22B, 31B)

When the LT trip, ST trip, INST/MCR trip, GF trip, RPT, NS, REF, UVT, pre-trip alarm, or contact temperature monitoring function is activated, LCD will indicate their operation individually and output is generated via the corresponding contact.
The OCR also has a self-diagnostic feature that monitors the internal tripping circuits. If detecting any fault in the circuits, this feature turns on the system alarm indicator. The control power is needed.

Operation indications
○: Self-hold (Note 1)
×: Auto-reset
△: status indication
—: Not applicable

Protective characteristic		L/R-characteristic	
Function		LCD	Contact
LTENP		○	○
ST		○	○ (Note 4)
INST/MCR		○	
GF (Ground fault)		○	○
(Note 2)	OH (Contact temperature monitoring)	○	○
	NS (Reverse phase)	○	○
	REF (Line side GF)	○	○
	Trip indication *1	△	△
RPT (Reverse power trip)		—	—
PTA (Pretrip alarm)		×	×
(Note 3)	PTA2 (Pretrip alarm)	×	×
	UV (Undervoltage alarm)	○	△
	Spring charge indication	△	△
System alarm		○	○

Note 1: To reset the operation indication, press the button on the OCR.
Note 2: Only one function can be selected from OH, NS, REF or trip indication. Selection of two or more functions involves manual connection of their control circuits (custom configuration). Contact Fuji for details.
Note 3: Only one function can be selected from PTA2, UV or spring charge indication. Selection of two or more functions involves manual connection of their control circuits (custom configuration). Contact Fuji for details.
Note 4: Motion indication contacts are commonly used for ST and INST/MCR.

*1: A switch is used to indicate the ACB has been tripped. This switch is activated whenever the off button of the overcurrent trip device, shunt drip device or undervoltage trip device is pressed.

3. Contact ratings

3-1. Contact ratings of Trip indicator and Spring change indicator

Voltage (V)	Switch contact ratings (A)	
	Resistive load	Inductive load
250 AC	3	3
250 DC	0.1	0.1
125 DC	0.5	0.5
30 DC	3	2

3-2. Contact ratings for other contacts

Voltage (V)	Current (A)			
	1. Single contact		2. Individual contacts	
	Resistive load	Inductive load	Resistive load	Inductive load
250 AC	3	3	0.5	0.2
250 DC	0.3	0.15	0.27	0.04
125 DC	0.5	0.25	0.5	0.2
30 DC	5	3	2	0.7

■ Combination of overcurrent tripping device and indicator

Division	Application	Type number *7	LCD		Protection function							
			Multi indication *6	Amperage indication only	Long time delay	Short time delay	Instantaneous or Making current release		Pre-trip alarm		Groumd fault	
					LT	ST	INST	MCR	PTA	PTA2 *1	GF *2	
Dial adjustment type	General feeder protection	11BLAL	—	—	●		●	—	—	—	—	
		11BLGL	—	—	●		●	—	—	—	●	
Standard LCD type	General feeder protection	21BLPS	—	●	●		●		●	—	—	
		21BLPG	—	●	●		●		●	—	●	
		21BRPS *5	—	●	●		●		●	—	—	
		21BRPG *5	—	●	●		●		●	—	●	
	Generator protection	21BSPS	—	●	●		●		●	—	—	
		22BSPR	—	●	●		●		●	○	—	
Enhanced LCD type	General feeder protection	31BLPS	●	—	●		●		●	—	—	
		31BLPG	●	—	●		●		●	—	●	
		31BRPS *5	●	—	●		●		●	—	—	
		31BRPG *5	●	—	●		●		●	—	●	
	Generator protection	31BSPS	●	—	●		●		●	○	—	
		31BSPR	●	—	●		●		●	○	—	

Note: *1 Only one function is selectable from PAT2, UV and spring charge indicator.
If you wish to select more than one function, the control circuit will be manually linked to special model. Please contact FUJI.
*2 The GF function is not available when the CT rated primary current [I_{CT}] is 200A or less.
*3 When the main circuit voltage exceeds 250V, a step-down transformer is necessary.
*4 Only one function is selectable from REF, OH, NS, and trip indicator.
If you wish to select more than one function, the control circuit will be manually linked special model. Please contact FUJI.
*5 You can select a R characteristic from the following 5 protective characteristics.
$I^{0.02}T$ IT I^2T I^3T I^4T
*6 Phase current, line voltage, and power can be indicated. See page 06/185 for details.
*7 Overcurrent trip device type

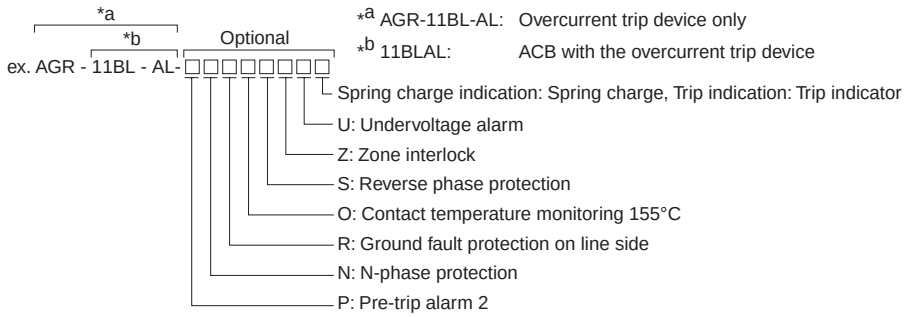

■ Ordering information

Specify the following:
1. Type number
2. Applied standard
3. Main circuit voltage and breaking capacity
4. Optional accessories for main device and OCR
5. Voltage of each device
6. External accessories

●:Standard ○:Optional

							Output indication				Undervoltage alarm	Field test function	Control power
	Reverse power	N-phase protection	Gruond fault on line side	Contact temperature monitoring	Reverse phase protection	Zone interlock	Single contact	Individual contact	Spring charge indicator *1	Trip indicator *4			
	RPT *3	NP	REF *4	OH *4	NS *4	Z					UV *1*3		
	—	○	—	—	—	—	●	—	○	○	—	—	Not required
	—	○	—	—	—	—	●	—	○	○	—	—	Not required
	—	○	—	—	○	—	—	●	○	○	—	●	Required
	—	○	○	—	○	—	—	●	○	○	—	●	Required
	—	○	—	—	○	—	—	●	○	○	—	●	Required
	—	○	○	—	○	—	—	●	○	○	—	●	Required
	—	—	—	—	—	—	—	●	○	○	—	●	Required
	●	—	—	○	—	○	—	●	○	○	○	●	Required
	—	○	—	○	○	○	—	●	○	○	○	●	Required
	—	○	○	○	○	○	—	●	○	○	○	●	Required
	—	○	—	○	○	○	—	●	○	○	○	●	Required
	—	○	○	○	○	○	—	●	○	○	○	●	Required
	—	—	—	○	—	○	—	●	○	○	○	●	Required
	●	—	—	○	—	○	—	●	○	○	○	●	Required

Note: • When AGR-11B OCR with single-contact indication is activated, the corresponding operation LED indicator is momentarily ON or OFF. But the LED indicator is kept ON when the protection function is checked with the optional OCR checker.
• If the control power is not supplied or is lost, each function operates as follows:

LT, ST, INST, RPT	Operates normally.
GF	Operates normally. When the CT rated primary current [I_{CT}] is less than 800 A and the GF pick-up current is set to 10 %, the GF becomes inoperative.
MCR	Operates as INST.
PTA 1-channel	Is inoperative.
LED indicator on OCRs with single-contact indication	Is momentarily on or off.
Contact output from OCRs with single-contact indication	Turns off after 40 ms or more.
Contact output from OCRs with individual contact indication	Is inoperative.
LCD	No display
Field test facility	Is inoperative.

■ **General view**
• AGR-11BL OCR (with L-characteristics)

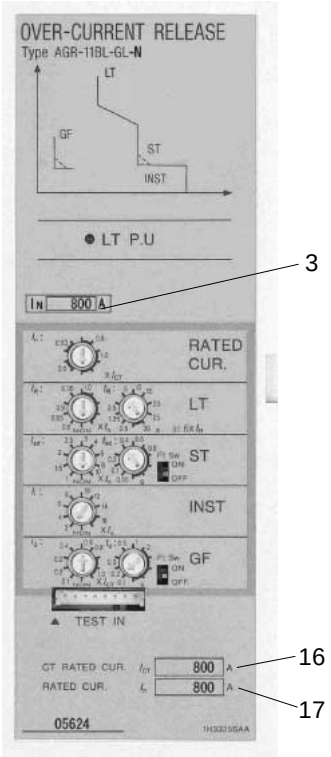

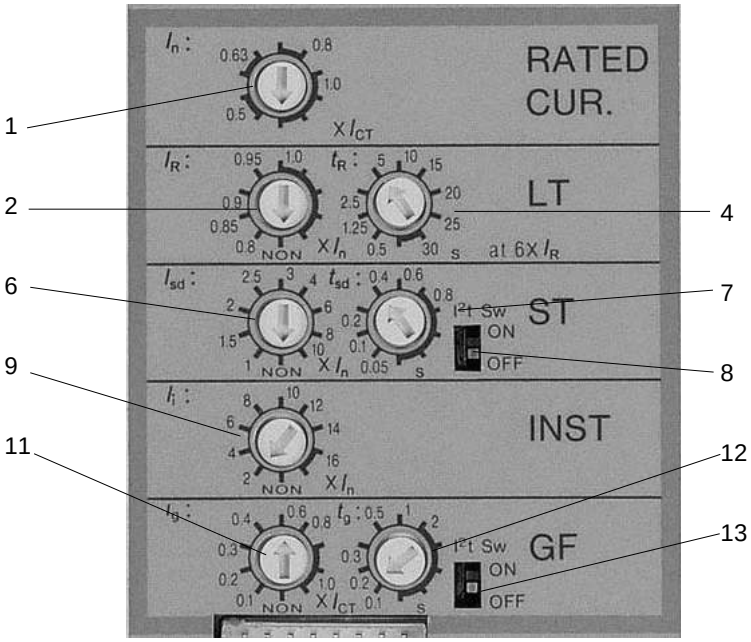

Setting item

1. Rated current
2. Long time delay trip pickup current (continuous)
3. N-phase protection trip pickup current (continuous)
4. Long time delay/N-phase protection trip timing
6. Short time delay trip pickup current
7. Short time delay trip timing
8. Short time delay trip I^2t mode
9. Instantaneous trip pickup current
11. Ground fault trip pickup current
12. Ground fault trip timing
13. Ground fault trip I^2t mode
16. CT rated primary current display-only field
17. Factory-set rated current display-only field

• AGR-21BL-PG OCR

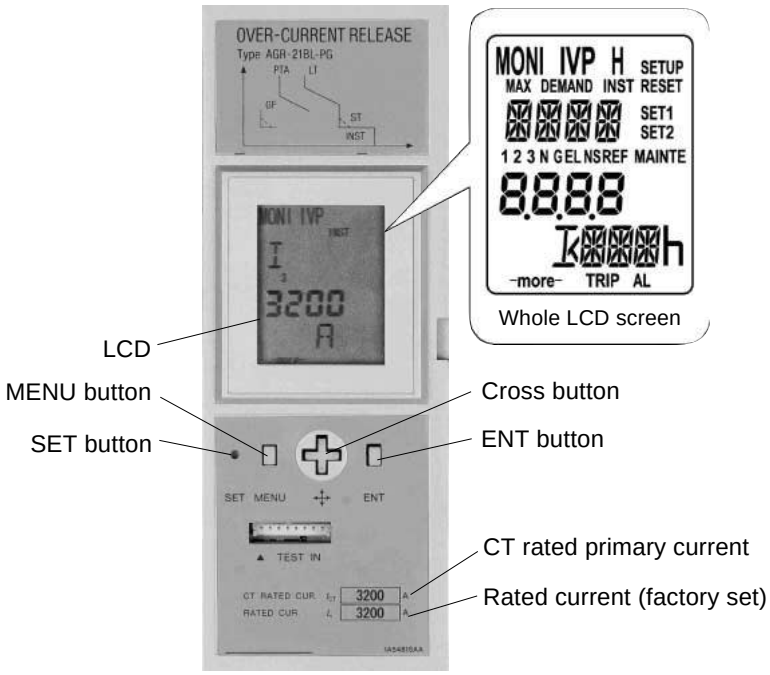

Button symbols and their meanings

Ⓢ : Press the SET button using a pointed tool such as the tip of a pen.

[M] : Press the MENU button.
Ⓐ : Press the up key of the cross button.
Ⓥ : Press the down key of the cross button.
Ⓡ : Press the right key of the cross button.
Ⓛ : Press the left key of the cross button.
[E] : Press the ENT button.

06

• AGR-31BL-PG OCR

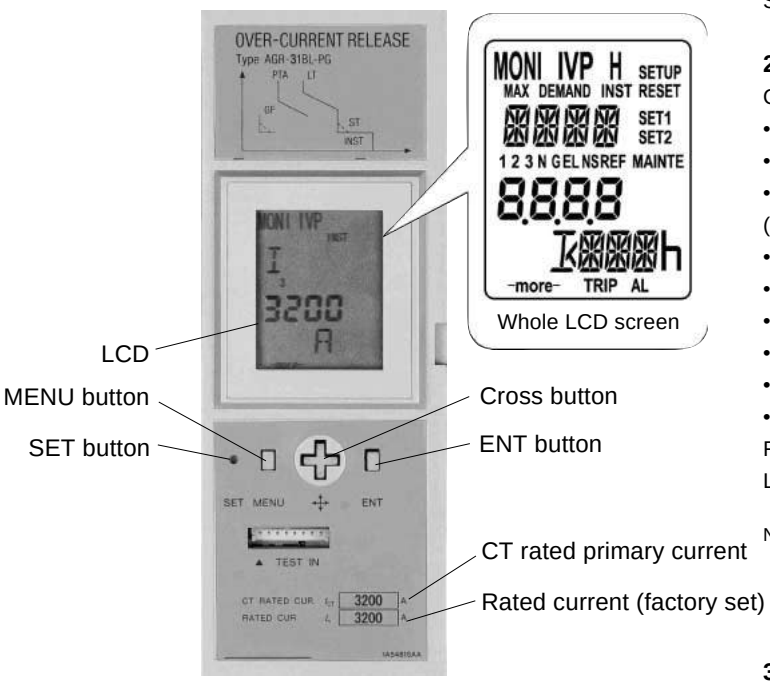

1. Button symbols and their meanings

Same as above.

2. Monitoring various data on L.C.D.

OCR can monitor,

- Phase current (A) of I_1, I_2, I_3 and their max. peak current
- Current (A) of I_N, I_g
- Line voltage (V) of V_{12}, V_{23}, V_{31} and their max. peak voltage (or, Phase voltage (V) of V_{1N}, V_{2N}, V_{3N} and their peak voltage)
- Active power max. (kW)
- Demand active power max. (kW)
- Power factor (cos ø)
- Electric energy (kWh/ MWh/ GWh)
- Frequency (Hz)
- Trip history

Fault current is monitored, and the operation cause is indicated on LCD and via individual contacts.

Note : The supply voltage to the OCR for indicating the main circuit voltage or power must not exceed 250 VAC. If the main circuit voltage exceeds 250 VAC, a step-down power transformer is needed. When ordering the ACB, state the step-down ratio of the transformer you will use.

3. Gives the system alarm with number on the LCD for the following abnormal function.

- Trip function fail
- MHT circuit break

■ Characteristics of overcurrent trip device

For general feeder circuit/L-characteristic (Type AGR-11BL, 21BL, 31BL)

Protection function		Setting range * ___ : Default setting
Adjustable long time delay trip LT	Pick-up current I_R (A) Time delay t_R (s) Tolerance of t_R (%)	I_nX (0.8 — 0.85 — 0.9 — 0.95 — 1.0 — NON), 6 steps • Non-tripping at I_R X 1.05 or less • Tripping between over 1.05I_R and 1.2I_R or less (0.5 — 1.25 — 2.5 — 5 — 10 — 15 — 20 — 25 — 30) at 600% X I_R, 9 steps ±15% +150ms -0ms
Adjustable short time delay trip ST	Pick-up current I_{Sd} (A) Tolerance of I_{Sd} (%) Time delay t_{Sd} (ms) Relay time (ms) Resettable time (ms) Total fault clearing time (ms)	I_nX (1 — 1.5 — 2 — 2.5 — 3 — 4 — 6 — 8 — 10 — NON), 10 steps ±15% 50 100 200 400 600 800, 6steps 25 75 175 375 575 775 120 170 270 470 670 870
Adjustable instantaneous trip INST or MCR	Pick-up current I_i (A) Tolerance of Ii (%)	I_nX (2 — 4 — 6 — 8 — 10 — 12 — 14 — 16 — NON), 9 steps ±20%
Adjustable pre-trip alarm PTA	Pick-up current I_{P1} (A) Tolerance of I_{P1} (%) Time delay t_{P1} (s) Tolerance of t_{P1} (%)	I_n X (0.75 — 0.8 — 0.85 — 0.9 — 0.95 — 1.0), 6 steps ±7.5% (5 —10 — 15 — 20 — 40 — 60 — 80 — 120 — 160 — 200) at I_{P1} or more, 10 steps ±15% +100ms -0ms
Adjustable ground fault trip GF	Pick-up current I_g (A) Tolerance of I_g (%) Time delay t_g (ms) Relay time (ms) Resettable time (ms) Total fault clearing time (ms)	I_{CT} X (0.1 — 0.2— 0.3 — 0.4 — 0.6 — 0.8 — 1.0 — NON), 8 steps ±20% 100 200 300 500 1000 2000, 6 steps 75 175 275 475 975 1975 170 270 370 570 1070 2070
Ground fault trip on line side REF (AGR-21B, 31B only)	Pick-up current [I_{REF}] (A) Current setting tolerance (%) Time-delay (s)	[I_{CT}] x (0.1 — 0.2 — 0.3 — 0.4 — 0.6 — 0.8 — 1.0 — NON), 8 steps ±20% Inst
Neutral phase protection function NP	Pick-up current I_N (A) Time delay t_N (s) Tolerance of t_N (%)	I_{CT} X (0.4 — 0.5 — 0.63 — 0.8 — 1.0) Factory set to a user-specified value • Non-tripping at 1.05 I_N or less • Tripping range: Between over 1.05I_N and 1.2I_N or less Long time delay (LT) trip at 600% of I_N ±15% +150ms -0ms
Reverse phase protection NS (AGR-21B, 31B only)	Pick-up current [I_{NS}] (A) Current setting tolerance (%) Time-delay [t_{NS}] (s) Time-delay tolerance (%)	[I_n] x (0.2 — 0.3 — 0.4 — 0.5 — 0.6 — 0.7 — 0.8 — 0.9 — 1.0), 9 steps ±10% At 150% current of [I_{ns}], 0.4 — 0.8 — 1.2 — 1.6 — 2 — 2.4 — 2.8 — 3.2 — 3.6 — 4 , 10 steps ±20% +150ms -0ms
Undervoltage alarm UV (AGR-31B only)	Recovery setting voltage (V) Recovery voltage tolerance (%) Setting voltage (V) Setting voltage tolerance (%) Time delay (s) Time delay tolerance (%)	[V_n] x (0.8 — 0.85 — 0.9 — 0.95), 4 steps ±5% [V_n] x (0.4 — 0.6 — 0.8), 3 steps ±5% 0.1 — 0.5 — 1 — 2 — 5 — 10 — 15 — 20 — 30 — 36, 10 steps ±5% +100ms -0ms
Control power		100 to 120V AC, 200 to 240V AC) common; 100 to 125V DC, 200 to 250V DC) common; 24V DC, 48V DC) common Power consumption: 5VA

• Values of [I_{CT}] and [I_n] 11BL, 21BL, 31BL

Type	CT rated primary current [I_{CT}] (A)	Rated current [In] (A) [I_{CT}] x 0.5	[I_{CT}] x 0.63	[I_{CT}] x 0.8	[I_{CT}] x 1.0	Remarks
DH08	200	100	125	160	200	There are no difference by terminal structure and safety standards
	400	200	250	320	400	
	800	400	500	630	800	
DH12	400	200	250	320	400	There are no difference by terminal structure and safety standards
	800	400	500	630	800	
	1250	630	800	1000	1250	
DH16	400	200	250	320	400	There are no difference by terminal structure and safety standards
	800	400	500	630	800	
	1250	630	800	1000	1250	
	1600	800	1000	1250	1600	IEC, JIS
		800	1000	1250	1600	NEMA, ANSI / Vertical terminals
		800	1000	1250	–	NEMA, ANSI / Horizontal terminals, Front terminals
DH20	400	200	250	320	400	There are no difference by terminal structure and safety standards
	800	400	500	630	800	
	1250	630	800	1000	1250	
	1600	800	1000	1250	1600	
	2000	1000	1250	1600	2000	IEC, JIS
		1000	1250	1600	2000	NEMA, ANSI / Vertical terminals
		1000	1250	1600	–	NEMA, ANSI / Horizontal terminals, Front terminals
DH25	2500	1250	1600	2000	2500	Vertical terminals
		1250	1600	2000	2500	IEC, JIS / Front terminals
		1250	1600	2000	–	IEC, JIS / Horizontal terminals
		1250	1600	2000	–	NEMA, ANSI / Horizontal terminals, Front terminals
DH30	3200	1600	2000	2500	3200	Vertical terminals
		1600	2000	2500	–	Horizontal terminals, Front terminals
DH40	4000	2000	2500	3200	4000	IEC, JIS
		2000	2500	3200	–	NEMA, ANSI
DH50	5000	2500	3200	4000	5000	IEC, JIS
DH60	6300	3200	4000	5000	6300	IEC, JIS
DH12H	200	100	125	160	200	There are no difference by terminal structure and safety standards
	400	200	250	320	400	
	800	400	500	630	800	
	1250	630	800	1000	1250	
DH16H	1600	800	1000	1250	1600	IEC, JIS
		800	1000	1250	1600	NEMA, ANSI / Vertical terminals
		800	1000	1250	–	NEMA, ANSI / Horizontal terminals
DH20H	2000	1000	1250	1600	2000	IEC, JIS
		1000	1250	1600	2000	NEMA, ANSI / Vertical terminals
		1000	1250	1600	–	NEMA, ANSI / Horizontal terminals
DH16P	200	100	125	160	200	There are no difference by terminal structure and safety standards
	400	200	250	320	400	
	800	400	500	630	800	
	1250	630	800	1000	1250	
	1600	800	1000	1250	1600	
DH20P	2000	1000	1250	1600	2000	There are no difference by terminal structure and safety standards
DH25P	2500	1250	1600	2000	2500	Vertical terminals
		1250	1600	2000	–	Horizontal terminals
DH30P	3200	1600	2000	2500	3200	Vertical terminals
		1600	2000	2500	–	Horizontal terminals

Protection characteristics

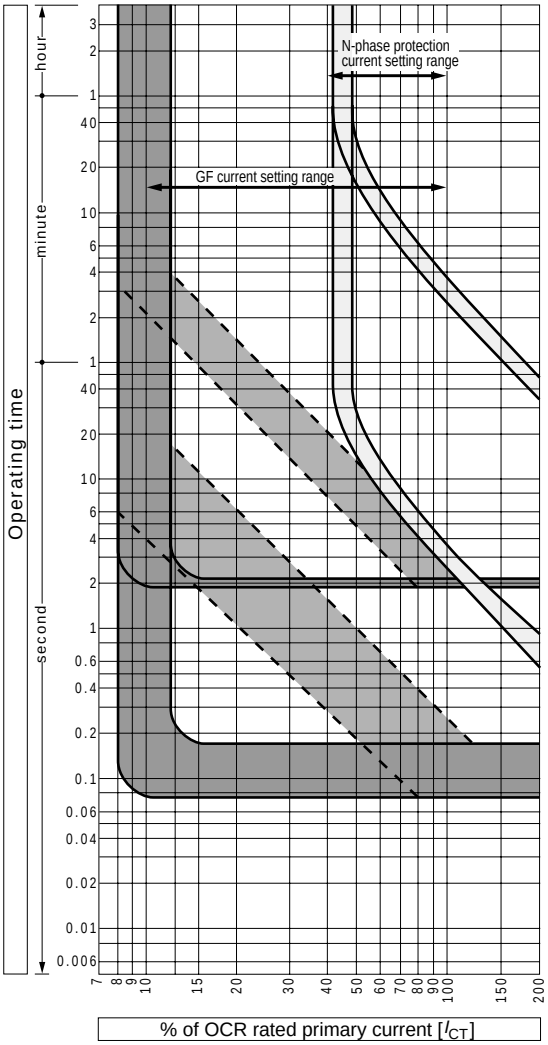

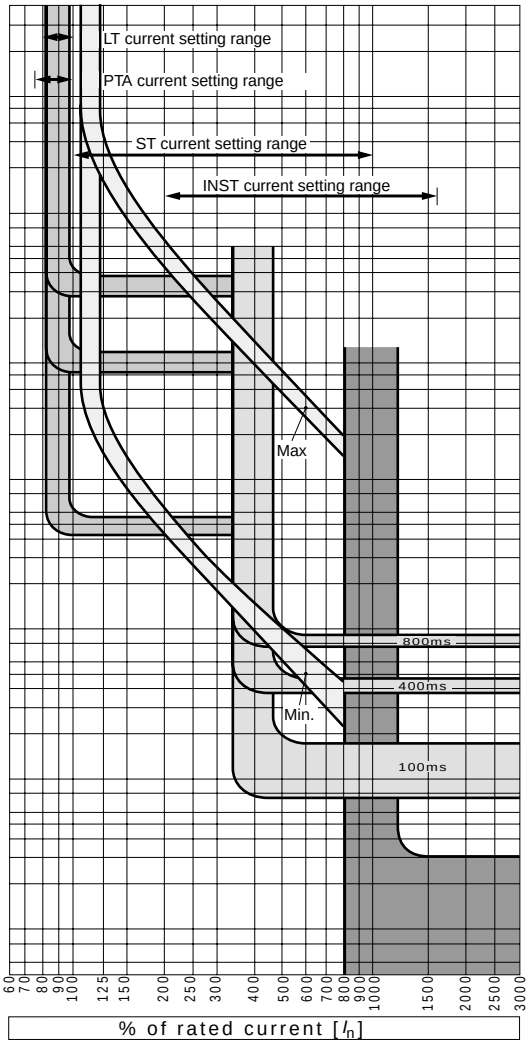

The ST trip characteristic shown in the figure applies when the ramp characteristic select switch is in the OFF position.

■ Characteristics of overcurrent trip device

For general feeder circuit/R-characteristic (Type AGR-21BR, 31BR)

Protection function		Setting range * ___ : Default setting
Adjustable long time delay trip LT	Pick-up current I_R (A) Time delay t_R (s) Tolerance of t_R (%)	Select one from among $I^{002}T$, IT, I^2T, I^3T, and I^4T by LCD. I_nX (0.8 — 0.85 — 0.9 — 0.95 — 1.0 — NON), 6 steps • Non-tripping at I_R X 1.05 or less • Tripping between over 1.05I_R and 1.2I_R or less (1 — 2 — 3 — 4 — 5 — 6.3 — 6.8 — 10) at 300% X I_R, 8 steps ±20% +150ms -0ms
Adjustable short time delay trip ST	Pick-up current I_{Sd} (A) Tolerance of I_{Sd} (%) Time delay t_{Sd} (ms) Relay time (ms) Resettable time (ms) Total fault clearing time (ms)	I_nX (1 — 1.5 — 2 — 2.5 — 3 — 4 — 6 — 8 — 10 — NON), 10 steps ±15% 50 100 200 400 600 800, 6 steps 25 75 175 375 575 775 120 170 270 470 670 870
Adjustable instantaneous trip INST or MCR	Pick-up current I_i (A) Tolerance of Ii (%)	I_nX (2 — 4 — 6 — 8 — 10 — 12 — 14 — 16 — NON), 9 steps ±20%
Adjustable pre-trip alarm PTA	Pick-up current I_{P1} (A) Tolerance of I_{P1} (%) Time delay t_{P1} (s) Tolerance of t_{P1} (%)	I_n X (0.75 — 0.8 — 0.85 — 0.9 — 0.95 — 1.0), 6 steps ±7.5% (5 —10 — 15 — 20 — 40 — 60 — 80 — 120 — 160 — 200) at I_{P1} or more, 10 steps ±15% +100ms -0ms
Adjustable ground fault trip GF	Pick-up current I_g (A) Tolerance of I_g (%) Time delay t_g (ms) Relay time (ms) Resettable time (ms) Total fault clearing time (ms)	I_{CT} X (0.1 — 0.2— 0.3 — 0.4 — 0.6 — 0.8 — 1.0— NON), 8 steps ±20% 100 200 300 500 1000 2000 , 6 steps 75 175 275 475 975 1975 170 270 370 570 1070 2070
Ground fault trip on line side REF	Pick-up current [I_{REF}] (A) Current setting tolerance (%) Time-delay (s)	[I_{CT}] x (0.1 — 0.2 — 0.3 — 0.4 — 0.6 — 0.8 — 1.0 — NON), 8 steps ±20% Inst
Neutral phase protection function NP	Pick-up current I_N (A) Time delay t_N (s) Tolerance of t_N (%)	I_{CT} X (0.4 — 0.5 — 0.63 — 0.8 — 1.0) Factory set to a user-specified value • Non-tripping at 1.05 I_N or less • Tripping between over 1.05I_N and 1.2I_N or less Long time delay (LT) trip at 300% of I_N ±20% +150ms -0ms
Reverse phase protection NS	Pick-up current [I_{NS}] (A) Current setting tolerance (%) Time-delay [t_{NS}] (s) Time-delay tolerance (%)	[In] x (0.2 — 0.3 — 0.4 — 0.5 — 0.6 — 0.7 — 0.8 — 0.9 — 1.0), 9 steps ±10% At 150% current of [Ins], 0.4 — 0.8 — 1.2 — 1.6 — 2 — 2.4 — 2.8 — 3.2 — 3.6 — 4 , 10 steps ±20% +150ms -0ms
Undervoltage alarm UV (AGR-31B only)	Recovery setting voltage (V) Recovery voltage tolerance (%) Setting voltage (V) Setting voltage tolerance (%) Time delay (s) Time delay tolerance (%)	[Vn] x (0.8 — 0.85 — 0.9 — 0.95), 4 steps ±5% [Vn] x (0.4 — 0.6 — 0.8), 3 steps ±5% 0.1 — 0.5 — 1 — 2 — 5 — 10 — 15 — 20 — 30 — 36, 10 steps ±5% +100ms -0ms
Control power		100 to 120V AC, 200 to 240V AC common; 100 to 125V DC, 200 to 250V DC common; 24V DC, 48V DC common Power consumption: 5VA

06

• Values of [I_{CT}] and [I_n] 21BR, 31BR

Type	CT rated primary current [I_{CT}] (A)	Rated current [In] (A) [I_{CT}] x 0.5	[I_{CT}] x 0.63	[I_{CT}] x 0.8	[I_{CT}] x 1.0	Remarks
DH08	200	100	125	160	200	There are no difference by terminal structure and safety standards
	400	200	250	320	400	
	800	400	500	630	800	
DH12	400	200	250	320	400	There are no difference by terminal structure and safety standards
	800	400	500	630	800	
	1250	630	800	1000	1250	
DH16	400	200	250	320	400	There are no difference by terminal structure and safety standards
	800	400	500	630	800	
	1250	630	800	1000	1250	
	1600	800	1000	1250	1600	IEC, JIS
		800	1000	1250	1600	NEMA, ANSI / Vertical terminals
		800	1000	1250	–	NEMA, ANSI / Horizontal terminals, Front terminals
DH20	400	200	250	320	400	There are no difference by terminal structure and safety standards
	800	400	500	630	800	
	1250	630	800	1000	1250	
	1600	800	1000	1250	1600	
	2000	1000	1250	1600	2000	IEC, JIS
		1000	1250	1600	2000	NEMA, ANSI / Vertical terminals
		1000	1250	1600	–	NEMA, ANSI / Horizontal terminals, Front terminals
DH25	2500	1250	1600	2000	2500	Vertical terminals
		1250	1600	2000	2500	IEC, JIS / Front terminals
		1250	1600	2000	–	IEC, JIS / Horizontal terminals
		1250	1600	2000	–	NEMA, ANSI / Horizontal terminals, Front terminals
DH30	3200	1600	2000	2500	3200	Vertical terminals
		1600	2000	2500	–	Horizontal terminals, Front terminals
DH40	4000	2000	2500	3200	4000	IEC, JIS
		2000	2500	3200	–	NEMA, ANSI
DH50	5000	2500	3200	4000	5000	IEC, JIS
DH60	6300	3200	4000	5000	6300	IEC, JIS
DH12H	200	100	125	160	200	There are no difference by terminal structure and safety standards
	400	200	250	320	400	
	800	400	500	630	800	
	1250	630	800	1000	1250	
DH16H	1600	800	1000	1250	1600	IEC, JIS
		800	1000	1250	1600	NEMA, ANSI / Vertical terminals
		800	1000	1250	–	NEMA, ANSI / Horizontal terminals
DH20H	2000	1000	1250	1600	2000	IEC, JIS
		1000	1250	1600	2000	NEMA, ANSI / Vertical terminals
		1000	1250	1600	–	NEMA, ANSI / Horizontal terminals
DH16P	200	100	125	160	200	There are no difference by terminal structure and safety standards
	400	200	250	320	400	
	800	400	500	630	800	
	1250	630	800	1000	1250	
	1600	800	1000	1250	1600	
DH20P	2000	1000	1250	1600	2000	There are no difference by terminal structure and safety standards
DH25P	2500	1250	1600	2000	2500	Vertical terminals
		1250	1600	2000	–	Horizontal terminals
DH30P	3200	1600	2000	2500	3200	Vertical terminals
		1600	2000	2500	–	Horizontal terminals

Protection characteristics

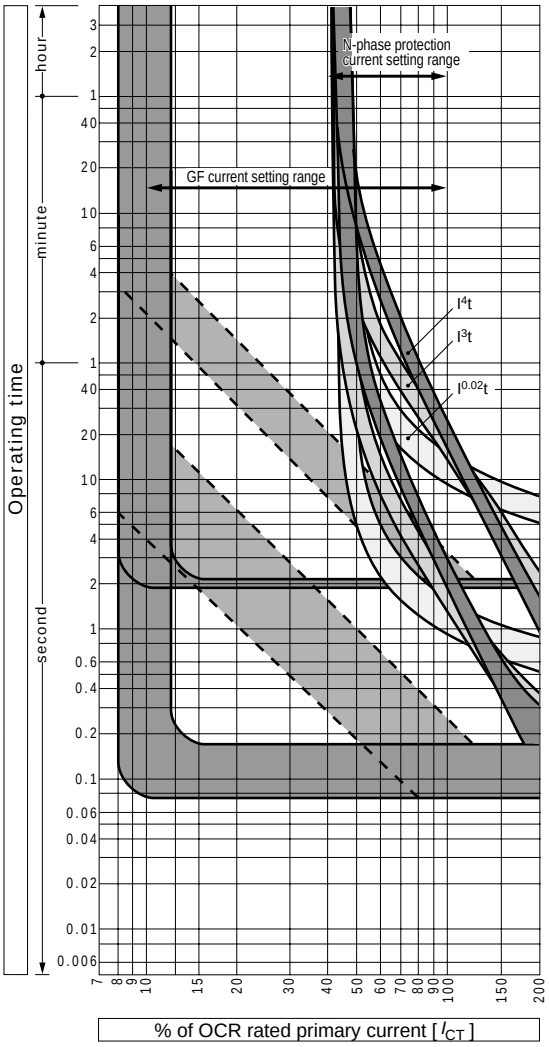

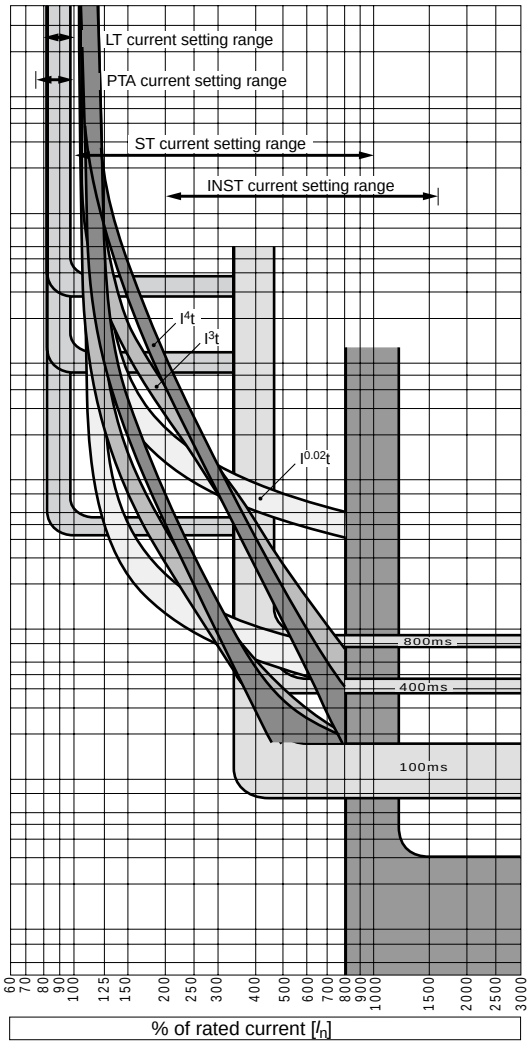

The ST trip characteristic shown in the figure applies when the ramp characteristic select switch is in the OFF position.

06

■ Supplied accessories

• ON–OFF operation counter

The ON-OFF operation counter is a mechanical 5-digit readout that shows the number of ON-OFF operations of the ACB.
Counter readings serve as a guide for maintenance or inspection.

• Auxiliary switches

The 7PDT auxiliary switches operate during the ACB ON/OFF operation.
Connections to the switches are made via screw terminals.
The auxiliary switches for draw-out type ACBs operate in the CONNECTED and TEST positions.
The auxiliary switches for ACBs conforming to marine use rules which operate in the CONNECTED position only.

Auxiliary switch ratings

Category	For general use		
Voltage	Resistive load (A)	Inductive load (A)	AC: cos ø≥ 0.3 DC: L/R ≤0.01
100-250V AC	5	5	
251-500V AC	5	5	
30V DC	1	1	
125-250V DC	1	1	

Notes *1: The chattering of NC-contacts due to ON/OFF operation of the ACB should be less than 20 ms.
*2: Do not supply different voltages to contacts of a switch.

• Position padlock lever

Using the position padlock lever prevents the breaker body from inadvertently being drawn out. The position padlock lever in the pulled-out position locks the breaker body in the CONNECTED, TEST, or ISOLATED position. Up to three padlocks (with 6mm dia. hasp) can be installed.

• ON-OFF button cover

An ON-OFF button cover (supplied as standard) prevents inadvertent or unauthorized operation of the ON or OFF button. It can be locked with up to three padlocks with 6mm dia. hasp.
Padlocks are not supplied.

• Draw-out handle

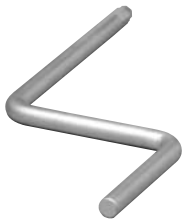

■ Optional accessories

• Auxiliary switches

The auxiliary switches operate during the ACB ON/OFF operation.
Connections to the switches are made via screw terminals.
The auxiliary switches for draw-out type ACBs operate in the CONNECTED and TEST positions.
The auxiliary switches for ACBs conforming to marine classification society's rules operate in the CONNECTED position only.
The auxiliary switches are available for general use and for microload.

Auxiliary switch arrangement

For general use	For microload
4PDT	—
4PDT	3PDT
10PDT	—
7PDT	3PDT

Auxiliary switch ratings

Voltage	For general use			For microload			
	Resistive load (A)	Inductive load (A)	AC: cos ø≥ 0.3 DC: L/R ≤0.01	Resistive load (A)	Inductive load (A)	AC: cos ø≥ 0.6 DC: L/R ≤0.007	Min. applicable load
100-250V AC	5	5		0.1	0.1		5V DC 1mA
251-500V AC	5	5		—	—		
30V DC	1	1		0.1	0.1		
125-250V DC	1	1		—	—		

Notes 1: The chattering of NC-contacts due to ON-OFF operation of the ACB should be less than 20 ms.
Notes 2: Do not supply different voltages to contacts of a switch.

06

● Key lock

There are two types of keylock: "Lock-in-OFF type" which prevents the breaker from being CLOSED and "Lock-in-ON type" prevents it from being OPENED.
When the ACB is fitted with a key lock, the operator cannot operate the ACB unless using a matched key.

● Key interlock

The key interlock is a system of interlocking between ACBs, each fitted with a key lock of lock-in OFF type.

• A key must be inserted to release the lock before the ACB can be closed.
• The ACB must be opened and locked in the OFF position before the key can be removed.
By utilizing the lock-in OFF type key lock feature, and then a limited number of keys by default provides an effective and reliable interlock system.
Using the same keys also allows interlocking between an ACB and other devices (such as a switchboard door).
ACBs are supplied with a cylinder lock or with a provision for tyep FS-2 Castell lock (with angular movement 90˚ clockwise to trap key).
The Castell lock is not supplied.

Example: Interlock for prevention of parallel feeding of two power supplies when a bus-tie breaker is used.

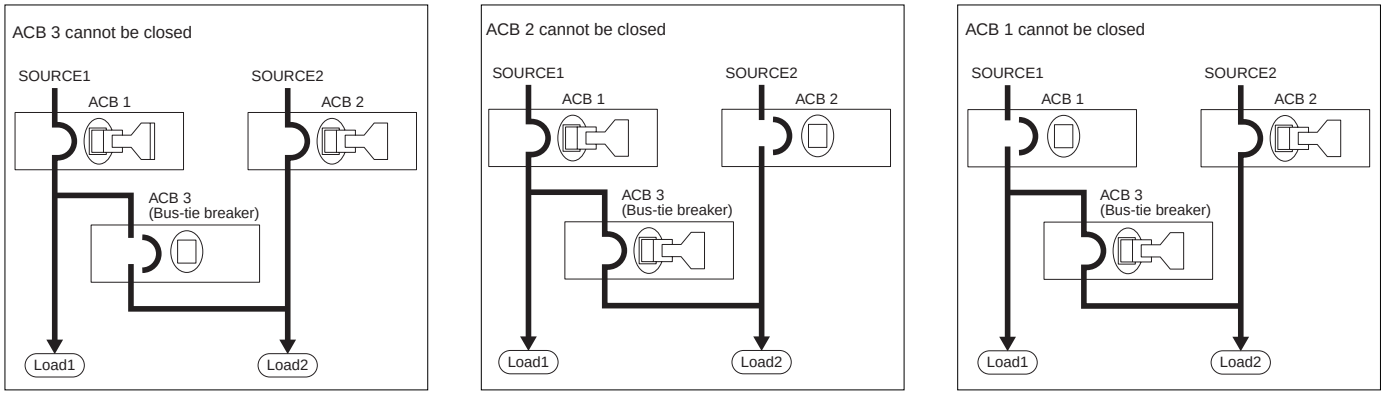

■ Optional accessories

• Mechanical interlock

Mechanical interlocks for interlocking 2 or 3 ACBs in either horizontal (Draw-out type and fixed type) or vertical (Draw-out type only) arrangements are available.
Interlocking is possible between any frame size of DH series ACB.
In conjunction with an electrical interlock, it will enhance safety and reliability of power distribution systems.

1. Horizontal type
This table shows the standard pitch between left side ACB A and right side ACB B, or between left side ACB B and right side ACB C.

Left ACB \ Right ACB		Pitch of ACB P (mm) (PC line to PC line)			
		DH08 to DH20 DH12H to DH20H	DH25 to DH30 DH16P to DH30P	DH40	DH50 DH60
		3P, 4P	3P, 4P	3P, 4P	3P, 4P
DH08 to DH20 DH12H to DH20H	3P	600, 700, 800	600, 700, 800	500, 600, 700	800, 1000, 1100
	4P	600, 700, 800, 900	700, 800, 900	600, 700, 800	900, 1000, 1100
DH25 to DH30 DH16P to DH30P	3P	600, 700, 800, 900	700, 800, 900	700, 800, 900	900, 1000, 1100
	4P	700, 800, 900, 1000	800, 900, 1000	800, 900, 1000	1000, 1100, 1200
DH40	3P	800, 900, 1000, 1100	900, 1000, 1100	800, 900, 1000	1100, 1200, 1300
	4P	1000, 1100, 1200, 1300	1000, 1100, 1200	1000, 1100, 1200	1300, 1400
DH50 DH60	3P	700, 800, 900, 1000	800, 900, 1000	700, 800, 900, 1000	1000, 1100, 1200
	4P	1000, 1100, 1200	1000, 1100, 1200	1000, 1100, 1200	1200, 1300, 1400

When ordering, select the required pitch for P1 and P2 from the above table, and specify the type and number of poles for ACB A, ACB B, and ACB C if exists.

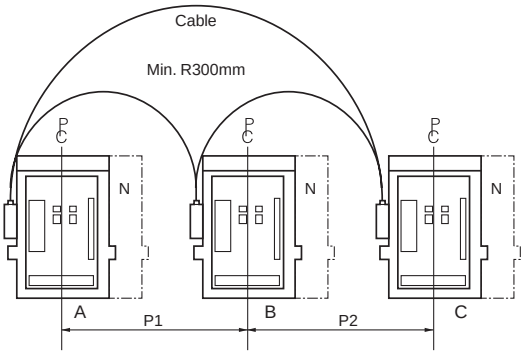

2. Vertical type
Minimum pitch (550mm) is possible.
Specify the reguired pitch when ordering.
Maximum is 1200mm.
Contact FUJI for the details of vertical type with 3 ACBs.

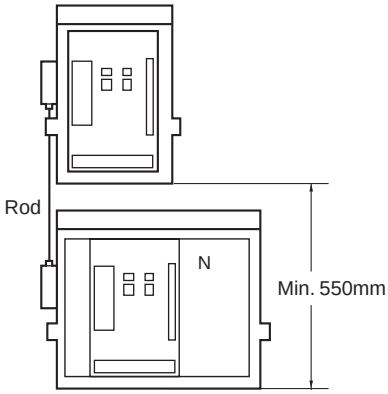

• Automatic closing spring release

This device allows the charged closing springs to be automatically released when the ACB is drawn out from the ISOLATED position to the DRAW-OUT position.
ANSI or NEMA-compliant ACBs require this option.

• Spring charge indicator

This switch can be used to indicate that the closing springs have been fully charged.
For the contact ratings of the switch, see the table 3-1 on page 06/181.

• Control circuit terminal cover

A control circuit terminal cover protects the terminal blocks for auxiliary switches, position switches, and control circuits from being accidentally touched, thus enhancing safety.

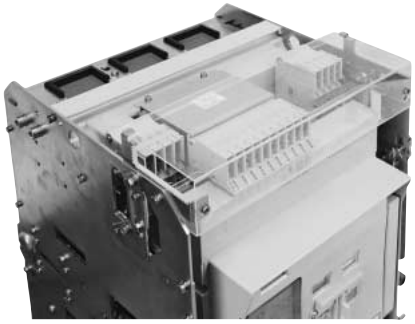

■ Optional accessories

• Door flange

A door flange can be used as a decoration panel that covers the cutout on the switchboard panel, and provides IP20 protection. For IP31 protection, please specify the door flange with a gasket.
Note: Door flange cannot be specified with door interlock.

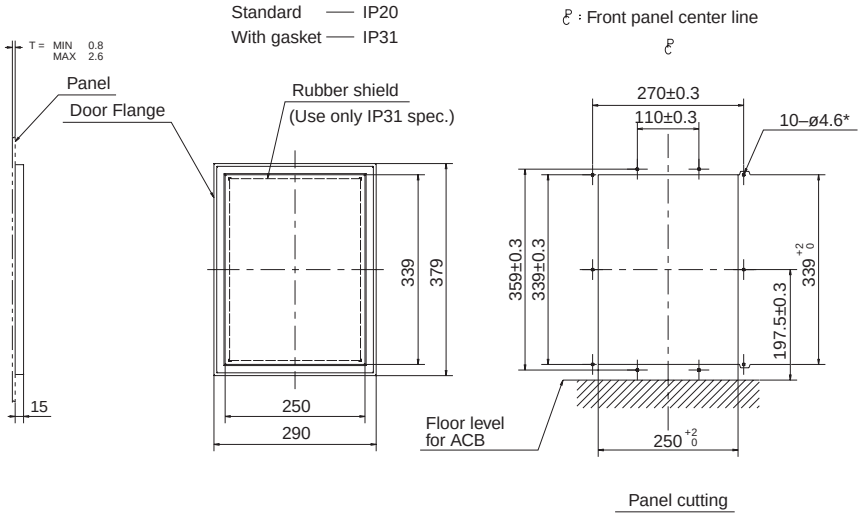

*: Mount IP20 door flange through 6 mounting holes and IP31 door flange through 10 mounting holes.

• OFF padlock

Permits the ACB to be padlocked in the OFF position. Max. three padlocks with 6mm dia. hasp can be fitted. Padlocking is possible only when ON-OFF indicator shows OFF. When the ACB is padlocked in the OFF position, both manual and electrial closing become inoperative, but the charging of the closing spring by manual or motor is still possible.
Note: OFF padlock facility cannot be fitted with key lock or key interlock.

• Interface barrier

An interface barrier prevents a possible short-circuit due to foreign objects entering between the poles of the main circuit terminals or between the line and load ends, thus enhancing operational reliability of the ACB.
This barrier cannot be applied to ACBs that are supplied with front connections or a reverse power trip function.

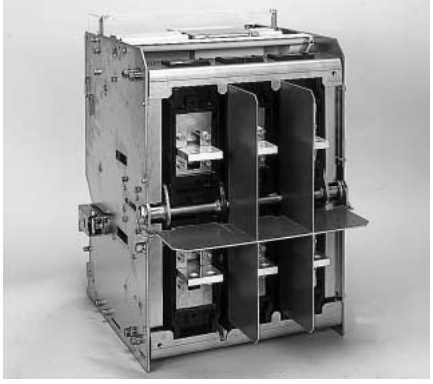

• Earthing device

There is a growing demand in L.V. distribution for greater protection against electric shock particularly during periods when maintenance work is being carried out on the main busbars or cables. A safe and economical way to meet this requirement is to apply system earthing via the normal service breaker. Earthing devices on FUJI ACBs comprises; permanent parts which are factory fitted by FUJI and are mounted on the ACB chassis and body to enable the ACB to receive the portable parts. Portable parts are supplied in loose kit form and are fitted on to the ACB body by the customer's engineer. This converts the ACB from a normal service device to an earthing device.
When the ACB is converted to the earthing device mode, the over current release and the other electrical tripping devices are automatically disabled to prevent the remote opening of the ACB.
It is recommended that the ON-OFF operating buttons be padlocked to prevent manual opening of the ACB when used in the earthing mode.
UVT function cannot be applied to the earthing device.

■ Optional accessories

• IP cover

An IP cover provides an IP55 grade of protection as required in IEC 60529. Even if the breaker body is on the ISOLATED position, IP cover can still be fitted on the ACB.

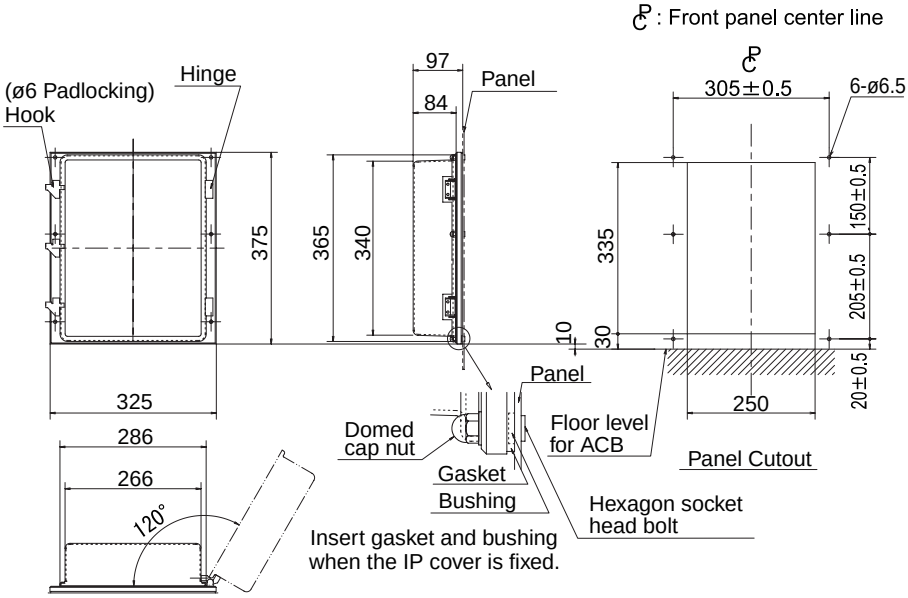

• OCR checker, type ANU-1

The OCR checker allows easy checking of the long time-delay trip, short time-delay trip, instantaneous trip, ground fault trip functions and the pre-trip alarm function of the OCR in the field.

Ratings and specifications

Power supply	• 100–110V AC, 50/60Hz or 100–240V AC, 50/60Hz with type C plug • 4 x AA alkaline cells
Power consumption	7VA
Dimensions	101 (W) x 195 (H) x 44 (D) mm
Mass	400 g

• Current transformer for neutral line (separately installed)

When using a 3-pole ACB with the ground fault protection function to protect a 3-phase, 4-wire system against ground fault, install an appropriate current transformer (CT) to the neutral line of the system. FUJI can provide this neutral line CT as an option. For the 4-pole ACB, a measuring CT instead of the neutral line CT is already built into the ACB with ground fault protection function.

Dimensions, mm

CW80-40LS

DH08, DH12, DH16
DH12H, DH16H, DH16P

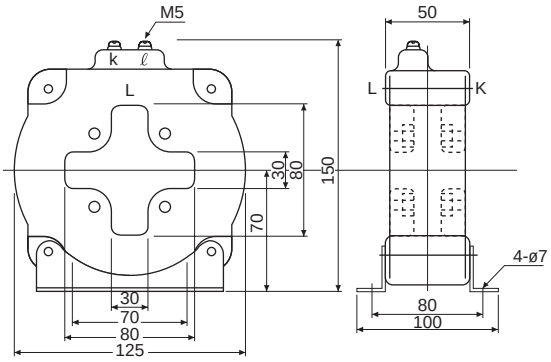

Type	Rated primary current
CW80-40LS	200, 400, 800, 1250, 1600

Rated secondary current is 5A.

EC160-40LS

DH20, DH25, DH30, DH40, DH50, DH60
DH20H, DH20P, DH25P, DH30P

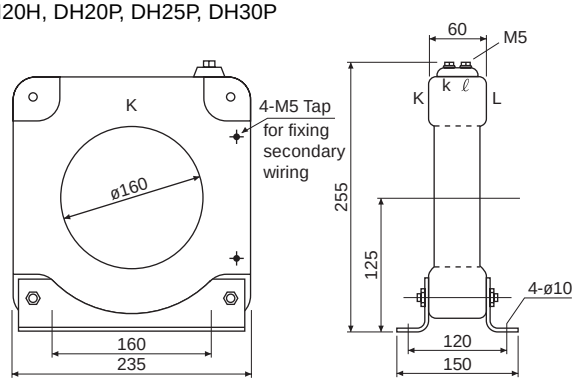

Type	Rated primary current
EC160-40LS	1600, 2000, 2500, 3200, 4000, 5000, 6300

Rated secondary current is 5A.

■ **Optional accessories (for draw-out type)**

• Main circuit safety shutters

The main circuit safety shutters automatically conceal the main circuit contacts on the draw-out cradle when the ACB is drawn out.

- The top and bottom shutters operate independently and can be separately padlocked in the closed position.
- Up to three padlocks (with 6mm dia. hasp) can be installed on each side using padlocking unit. (Padlock not supplied)
- In the closed position, the shutters are locked to the extent that they cannot be easily unlocked by hand. They can be unlocked and held open if required for the purpose of inspection or maintenance.

• Lifter

A special lifter is available to allow easy and safe transportation or installation of the ACB. A drop prevention mechanism is standard.

ACB mounting position

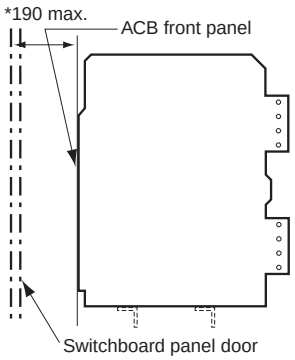

*: If 190 mm is exceeded, contact FUJI.

• Control circuit safety shutter

The control circuit safety shutter covers the control circuit contacts, ensuring safety.

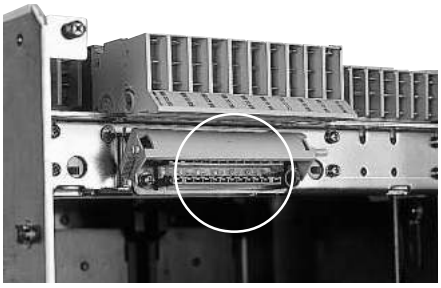

• Test jumper

The test jumper is a plug-in type, and allows ON-OFF tests on all the DH series ACBs with the breaker body drawn out from the draw-out cradle. The standard jumper cable is 5m long.

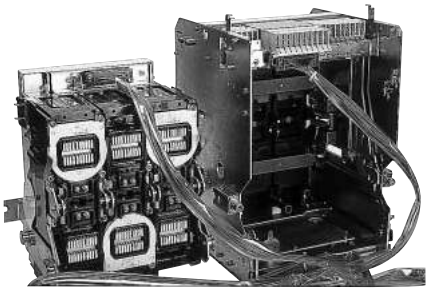

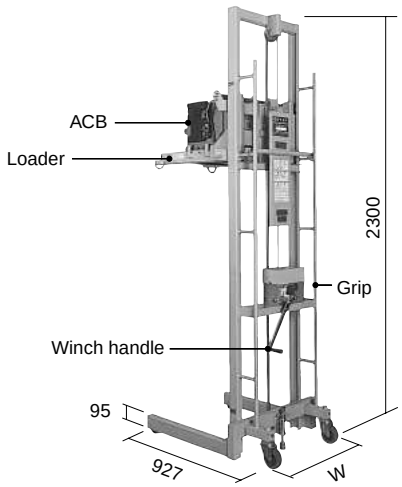

Type of Lifter	Mass (kg)	W (mm)	Applicable ACBs
AWR-1F	110	700	800 to 3200A
AWR-2F	120	890	800 to 4000A

• Breaker fixing bolts

The breaker fixing bolts hold the breaker body securely to the draw-out cradle in position. Use them if the ACB is subject to strong vibration.

• Mal-insertion prevention device

Interchangeability exists within the DH series ACBs. Because of this feature, there is a possibility for an ACB of a different specification being placed into the draw-out cradle. Using the mal-insertion prevention device eliminates such a possibility.
This device is capable of distinguishing nine different breaker bodies.

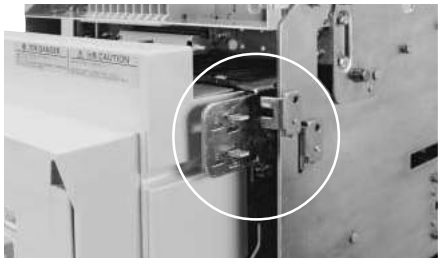

• Lifting plate

Lifting plates are detachable tools that can be used to lift a breaker body out of a draw-out cradle.

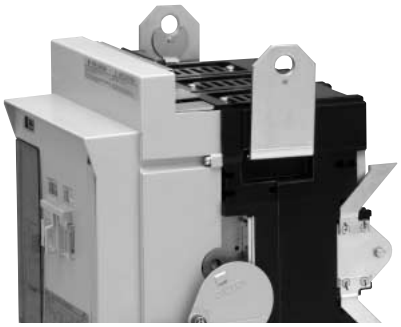

■ Optional accessories (for draw-out type)

• Position switches

The position switches operate to give indication of breaker positions: CONNECTED, TEST, ISOLATED, and INSERT. There are two contact arrangements: 2PDT and 4PDT.

Connections to the switches are made via tab or screw type terminals.
The following table lists the available types of the switches.

Type	Number of contacts	Contact arrangement			
		INSERT	ISOLATED	TEST	CONN
ALR-0110P	2PDT	0	1	1	0
ALR-0101P		0	1	0	1
ALR-0011P		0	0	1	1
ALR-0200P		0	2	0	0
ALR-0020P		0	0	2	0
ALR-0002P		0	0	0	2
ALR-1111P	4PDT	1	1	1	1
ALR-1210P		1	2	1	0
ALR-1201P		1	2	0	1
ALR-0211P		0	2	1	1
ALR-1120P		1	1	2	0
ALR-1021P		1	0	2	1
ALR-0121P		0	1	2	1
ALR-1102P		1	1	0	2
ALR-1012P		1	0	1	2
ALR-0112P		0	1	1	2
ALR-0220P		0	2	2	0
ALR-0202P		0	2	0	2
ALR-0022P		0	0	2	2
ALR-1030P		1	0	3	0
ALR-0130P		0	1	3	0
ALR-0031P		0	0	3	1
ALR-1003P		1	0	0	3
ALR-0103P		0	1	0	3
ALR-0013P		0	0	1	3
ALR-0040P		0	0	4	0
ALR-0004P		0	0	0	4

Position switch operation sequence

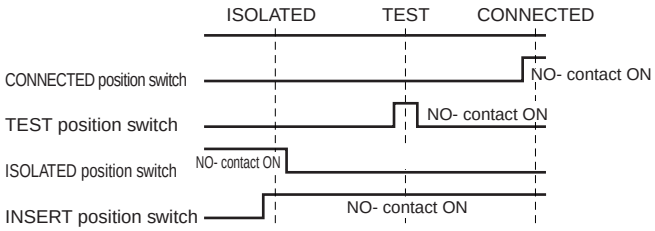

The INSERT position means the breaker body is in a position between ISOLATED and CONNECTED.

Position switch ratings

Voltage	Resistive load (A)	Inductive load (A) (COS ø ≥ 0.6, L/R ≤ 0.007)
100-250V AC	11	6
250V DC	0.3	0.3
125V DC	0.6	0.6
30V DC	6	5
8V DC	10	6

• Door interlock

The door interlock prevents the switchboard door from being opened unless the breaker body is in the ISOLATED position. When the draw-out handle is removed while the ACB is in the ISOLATED position, the interlock is released and the switchboard door can be opened.
The breaker body cannot be inserted unless the switchboard door is closed.
Contact FUJI for details.

Note 1: When a Door interlock is specified, a storage draw-out handle is supplied.
Note 2: Door interlock can not be specified with Door flange.
Note 3: Contact FUJI for the details for fitting Door Interlock with IP55 cover.

• Step-down transformer

See page 06/176.

• Capacitor trip device

See page 06/177.

• Undervoltage trip device

See page 06/178.

■ Applicable maximum rated current by main circuit terminal connection

Type	Standard	IEC, EN, AS, JIS			NEMA, ANSI		
	Direction	Vertical	Horizontal	Front	Vertical	Horizontal	Front
DH08		800A	800A	800A	800A	800A	800A
DH12		1250A	1250A	1250A	1250A	1250A	1250A
DH16		1600A	1600A	1600A	1600A	1540A	1570A
DH20		2000A	2000A	2000A	2000A	1670A	1830A
DH25		2500A	2430A	2500A	2500A	2230A	2430A
DH30		3200A	2790A	3150A	3200A	2700A	2890A
DH40		4000A	–	–	3700A	–	–
DH50		5000A	–	–	–	–	–
DH60		6300A	–	–	–	–	–
DH12H		1250A	1250A	–	1250A	1250A	–
DH16H		1600A	1600A	–	1600A	1540A	–
DH20H		2000A	2000A	–	2000A	1670A	–
DH16P		1600A	1600A	–	1600A	1600A	–
DH20P		2000A	2000A	–	2000A	2000A	–
DH25P		2500A	2430A	–	2500A	2230A	–
DH30P		3200A	2790A	–	3200A	2700A	–

: Standard terminal connection

■ Dielectric strength

Circuit			Withstand voltage (at 50/60 Hz)		Rated Impulse withstand voltage U_{imp}
Main circuit			Between terminals, terminal group to earth	3500V AC for 1 minute	12kV
Control circuits	Auxiliary switches	For general service	Terminal group to earth	2500V AC for 1 minute	6kV
		For microload	Terminal group to earth	2000V AC for 1 minute	4kV
	Position switches		Terminal group to earth	2000V AC for 1 minute	4kV
	Over-current release (OCR)		Terminal group to earth	2000V AC for 1 minute	4kV
	Power supply for undervoltage/ reverse power trip function		Terminal group to earth	2500V AC for 1 minute	6kV
Other accessories			Terminal group to earth	2000V AC for 1 minute	4kV

Note: The values shown above are those measured on phase connections and cannot be applied to control terminals on the ACB.

■ Internal resistance and power consumption

• Standard types

Type	DH08	DH12	DH16	DH20	DH25	DH30	DH40	DH50	DH60
Rated current (A)	800	1250	1600	2000	2500	3200	4000	5000	6300
DC internal resistance per pole (m)	0.033	0.033	0.028	0.024	0.014	0.014	0.014	0.012	0.010
AC power consumption for 3 poles (W)	200	350	350	490	600	780	1060	1620	1910

• High breaking types

Type	DH12-H	DH16-H	DH20-H	DH16-P	DH20-P	DH25-P	DH30-P
Rated current (A)	1250	1600	2000	1600	2000	2500	3200
DC internal resistance per pole (m)	0.024	0.024	0.024	0.014	0.014	0.014	0.014
AC power consumption for 3 poles (W)	260	350	490	310	430	600	780

■ Derating

• Standard types

Based Standards	Ambient temperature (°C)	Type	DH08	DH12	DH16	DH20	DH25	DH30	DH40	DH50	DH60
		Connecting bar sizes	2x50x5t	2x80x5t	2x100x5t	3x100x5t	2x100x10t	3x100x10t	4x150x6t	3x200x10t	4x200x10t
IEC60947-2 EN 60947-2 AS3947.2 JIS C8201-2-1	40 (Standard ambient temperature)		800	1250	1600	2000	2500	3200	4000	5000	6300
	45		800	1250	1600	2000	2500	3200	4000	5000	6300
	50		800	1250	1600	1900	2500	3130	4000	4950	6000
	55		800	1200	1540	1820	2500	2990	3940	4710	5680
	60		800	1150	1460	1740	2400	2850	3760	4450	5370
NEMA, SG-3 ANSI C37.13	40 (Standard ambient temperature)		800	1250	1540	2000	2500	3200	3700	—	—
	45		800	1190	1470	1960	2500	3010	3580	—	—
	50		800	1130	1390	1860	2440	2860	3470	—	—
	55		790	1070	1310	1750	2300	2690	3350	—	—
	60		740	1000	1230	1640	2150	2520	3140	—	—

Note: The values are applicable for both Draw-out type and Fixed type.
The values of DH08 to DH16 are for horizontal terminals on both line and load side.
The values of DH20 to DH40 are for vertical terminals on both line and load side.
Above figures are subject to the design of the enclosure and rating of busbar.

• Higt breaking types

Based Standards	Ambient temperature (°C)	Type	DH12-H	DH16-H	DH20-H	DH16-P	DH20-P	DH25-P	DH30-P
		Connecting bar sizes	2x80x5t	2x100x5t	3x100x5t	2x100x5t	3x100x5t	2x100x10t	3x100x10t
IEC60947-2 EN 60947-2 AS3947.2	40 (Standard ambient temperature)		1250	1600	2000	1600	2000	2500	3200
	45		1250	1600	2000	1600	2000	2500	3200
	50		1250	1600	1900	1600	2000	2500	3200
	55		1250	1600	1820	1600	2000	2500	2990
	60		1250	1550	1740	1600	2000	2400	2850
NEMA, SG-3 ANSI C37.13	40 (Standard ambient temperature)		*	1600	2000	*	*	2500	3200
	45		*	1600	1960	*	*	2500	3010
	50		*	1600	1860	*	*	2440	2860
	55		*	1510	1750	*	*	2300	2690
	60		*	1420	1640	*	*	2150	2520

Note: The values are for vertical terminals on both line and load side.
Above figures are subject to the design of the enclosure and rating of busbar.
* Contact FUJI for details.

■ Operation Environments and recommendation for busbars connection

• Standard environment

The standard environment for ACBs is as follows:

Ambient temperature	–5°C to +40°C The average temperature for 24 hours must not exceed 35°C.
Relative humidity	45% to 85%
Attitude	Below 2000 m
Atmosphere	Excessive water vapor, oil vapor, smoke, dust, or corrosive gases must not exist. Sudden change in temperature, condensation, or icing must not occur.

• Special environment

Tropicalization (Fungus and moisture treatment)
Specify this treatment when the ACB is used under high-temperature and high-humidity conditions.
Conditions: Max. permissible ambient temperature 60°C
Max. permissible humidity 95% rel.
No condensation

Cold climate treatment
Specify this treatment when the ACB is used in cold areas.
Conditions: Min. permissible storage temperature –40°C
Min. permissible operating temperature –25°C
No condensation

Anti-corrosion treatment
Specify this treatment when the ACB is used in a corrosive atmosphere.
Contact FUJI for details.

■ Recommendation busbars connection

The busbars to the ACB should be firmly supported near the ACB terminal. Fault current flow through the busbars develops a large electromagnetic force between the busbars, and the support must be strong enough to withstand such forces. The ACB should not be relied on as a single support. The busbar support should be made of high quality insulator. Secure sufficient insulation distance (creeping distance above the busbar support, in particular).

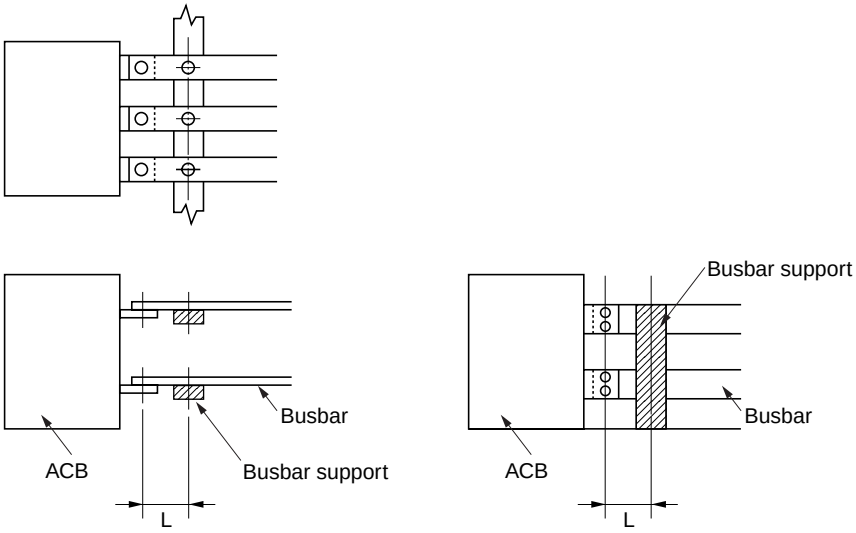

The maximum distance of the connection point of ACB to the first busbar support

Short-circuit current (kA)		30	50	65	80	100	120
Distance L (mm)	Type DH08 to 20, DH12-H to 20-H	300	250	150	150	–	–
	Type DH25 to 40, DH16-P to 30-P	350	300	250	150	150	–
	Type DH50, DH60	350	300	250	150	150	150

■ Dimensions, mm

• Drow-out types
DH08, DH12, DH16, DH20
DH12-H, DH16-H, DH20-H

Terminal size

Type	t_1	t_2	t_3	W
DH08	10	10	15	17.5
DH12	10	10	15	17.5
DH16	20	15	25	22.5
DH20	20	15	25	——
DH12-H	20	15	——	——
DH16-H	20	15	——	——
DH20-H	20	15	——	——

℄: Front panel center line

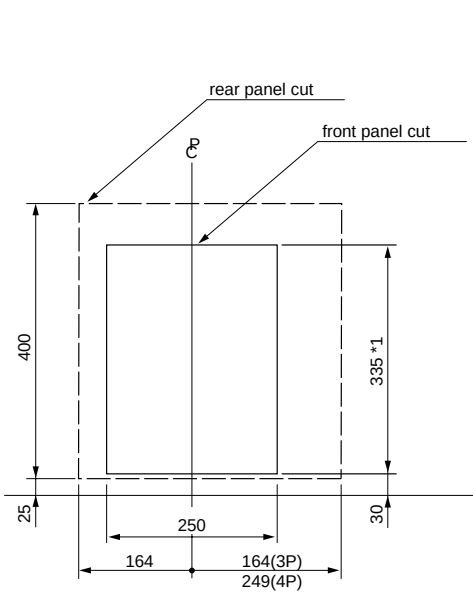

panel cut-out

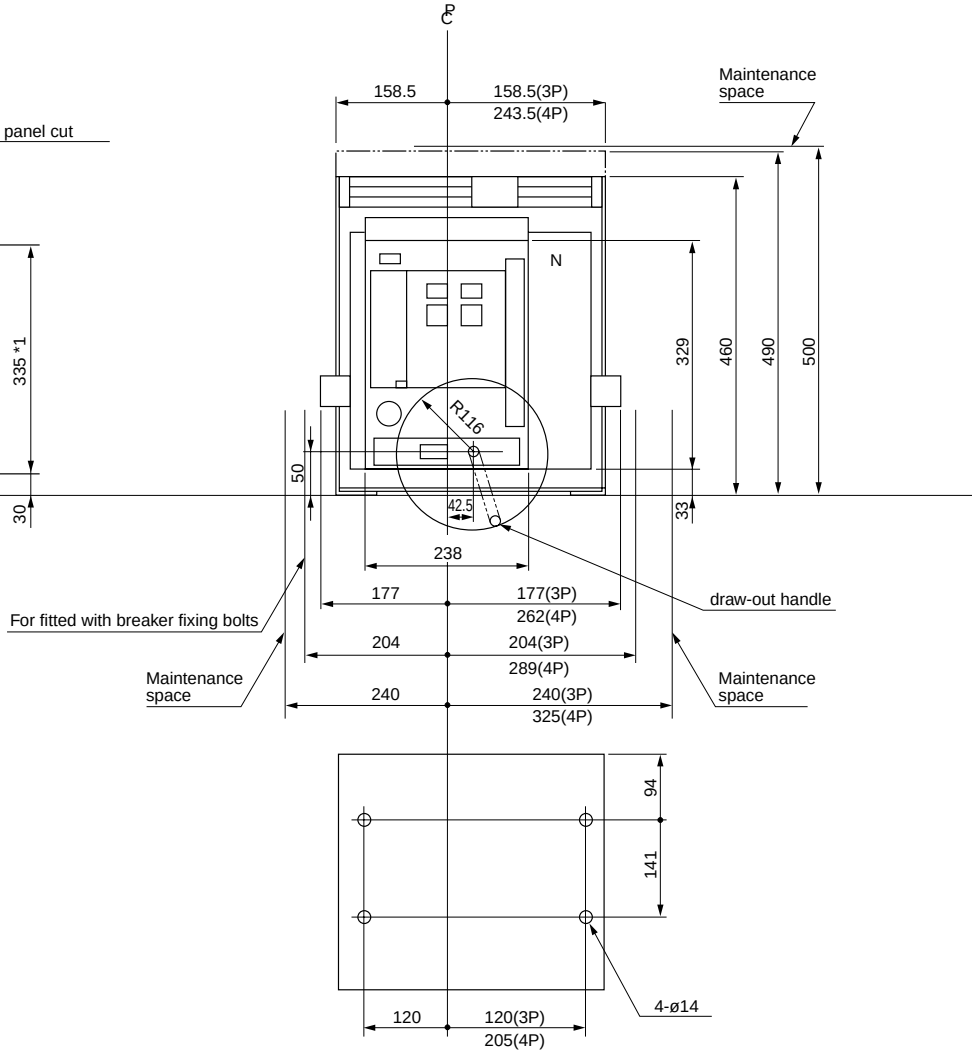

Mounting holes

*1: Panel cut should be 339 mm not 335 mm when the door flange is used. Refer to page 06/195.
*2: Conductors including connecting bolts should be separated min-7mm from Draw-out arm.
• N represents the neutral pole of 4-pole ACBs.
• For High breaking types vertical terminal is standard and horizontal terminal is optional, and front connection is not available.

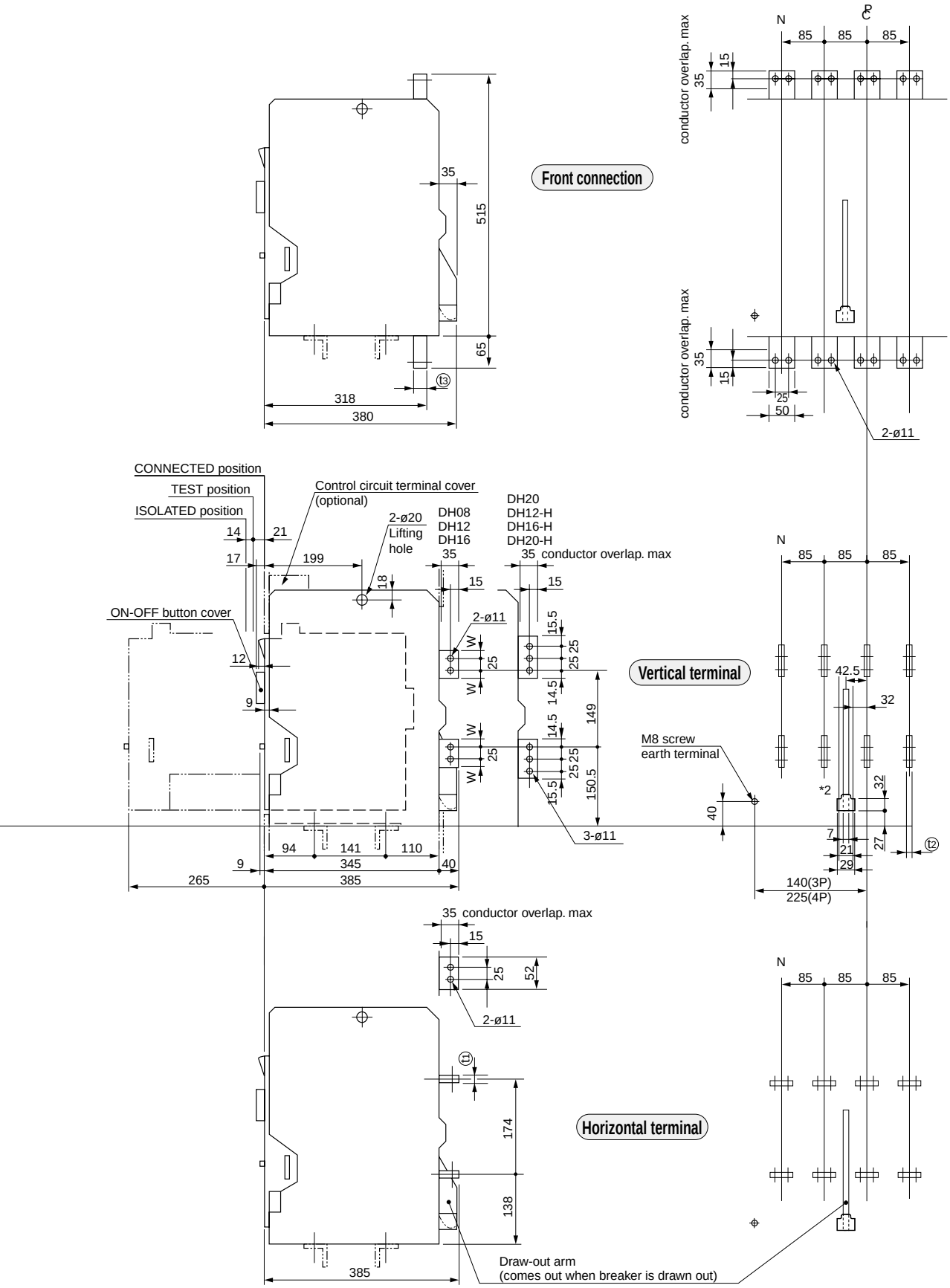
Front connection
Vertical terminal
Horizontal terminal
CONNECTED position
TEST position
ISOLATED position
Control circuit terminal cover
(optional)
2-ø20
Lifting
hole
DH08
DH12
DH16
DH20
DH12-H
DH16-H
DH20-H
35 conductor overlap. max
ON-OFF button cover
2-ø11
3-ø11
M8 screw
earth terminal
conductor overlap. max
Draw-out arm
(comes out when breaker is drawn out)
140(3P)
225(4P)

■ Dimensions, mm

• Fixed types
DH08, DH12, DH16, DH20

Terminal size

Type	ⓣ1	ⓣ2	ⓣ3	W
DH08	10	10	15	17.5
DH12	10	10	15	17.5
DH16	20	15	25	22.5
DH20	20	15	25	——

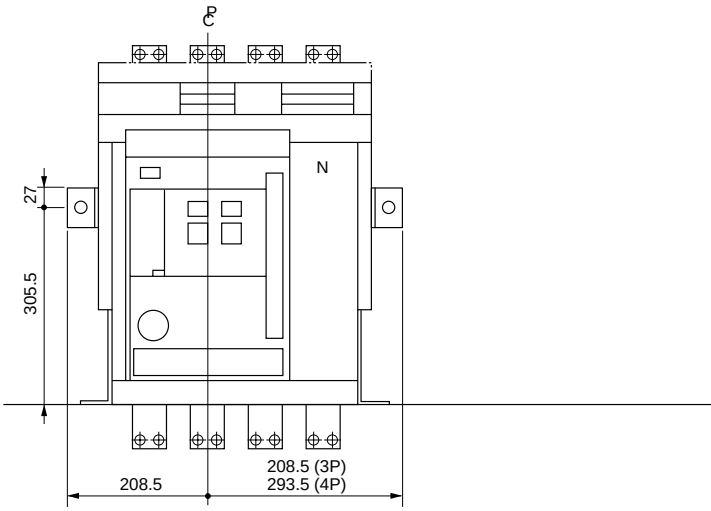

P/C : Front panel center line

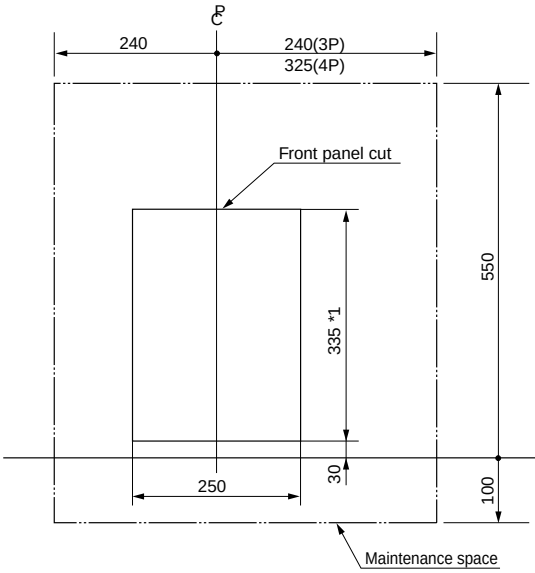

Panel cutout

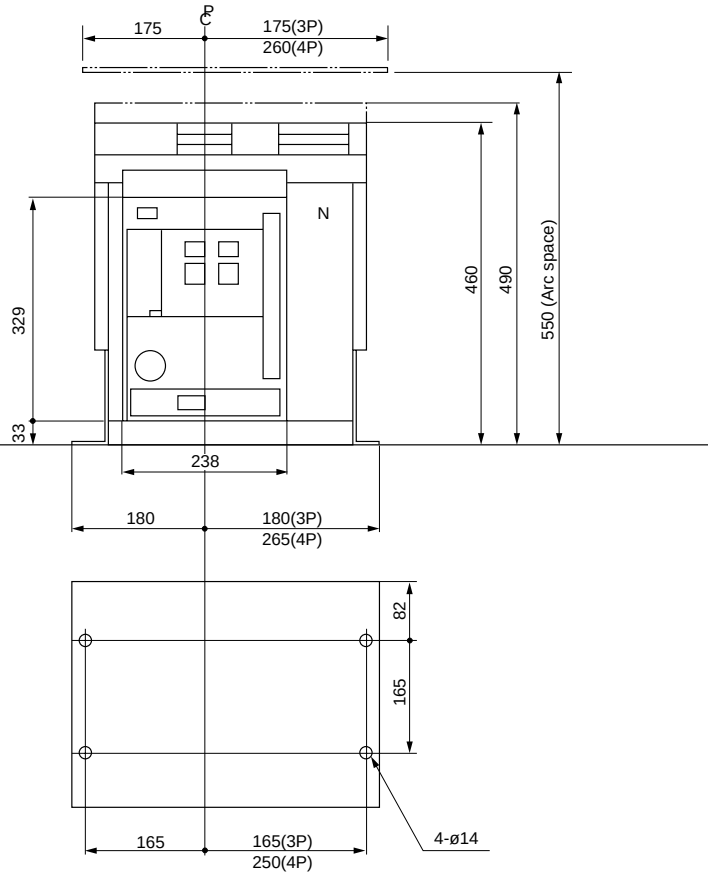

Mounting holes

*1: Panel cut should be 339 mm not 335 mm when the door flange is used. Refer to page 06/195.

• N represents the neutral pole of 4-pole ACBs.

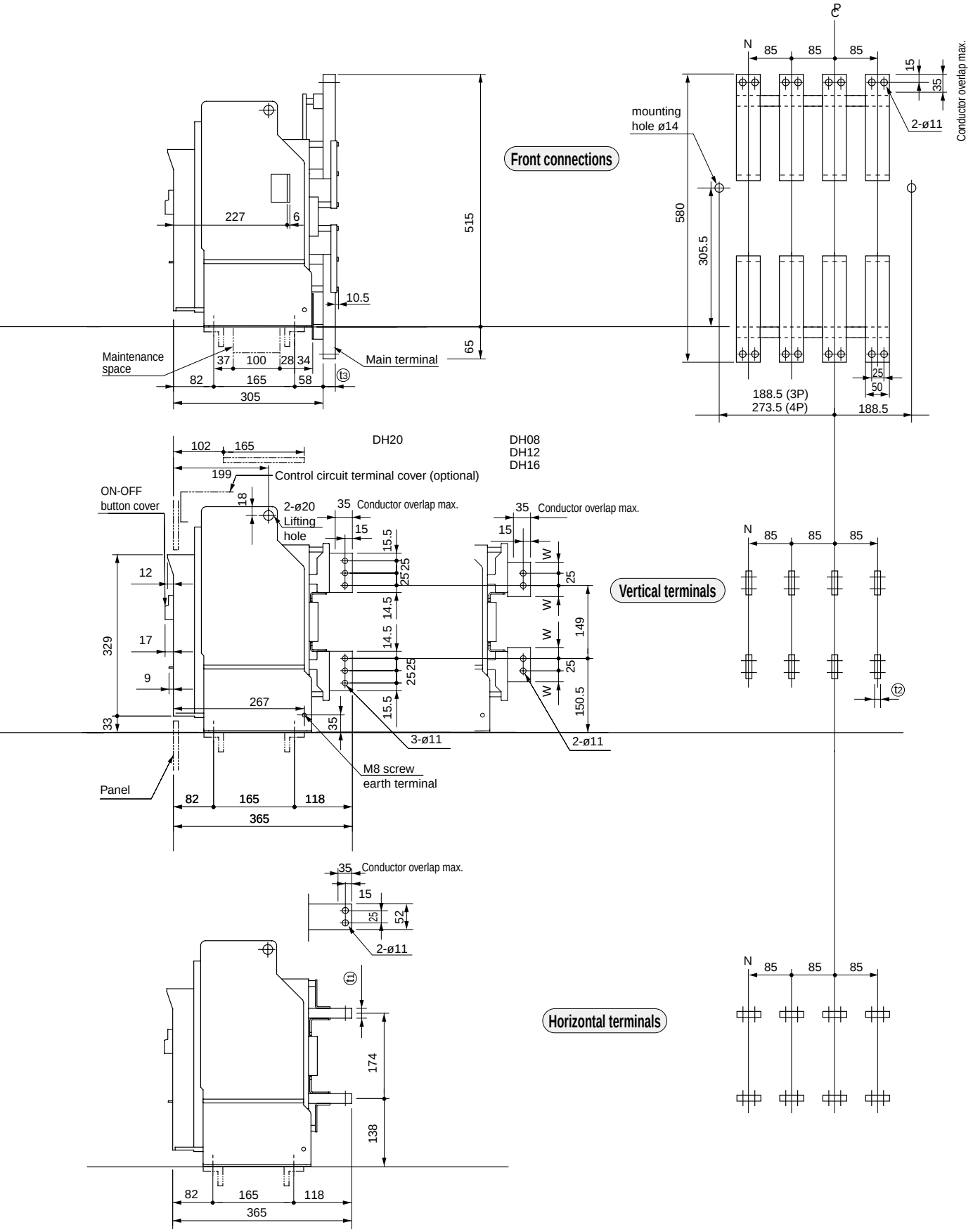
Front connections
Vertical terminals
Horizontal terminals
DH20
DH08
DH12
DH16
Maintenance space
Main terminal
mounting hole ø14
Conductor overlap max.
2-ø11
188.5 (3P)
273.5 (4P)
188.5
Control circuit terminal cover (optional)
ON-OFF button cover
2-ø20 Lifting hole
3-ø11
M8 screw earth terminal
Panel
365

■ Dimensions, mm

• Drow-out types
DH25, DH30
DH16-P, DH20-P, DH25-P, DH30-P

℄ : Front panel center line

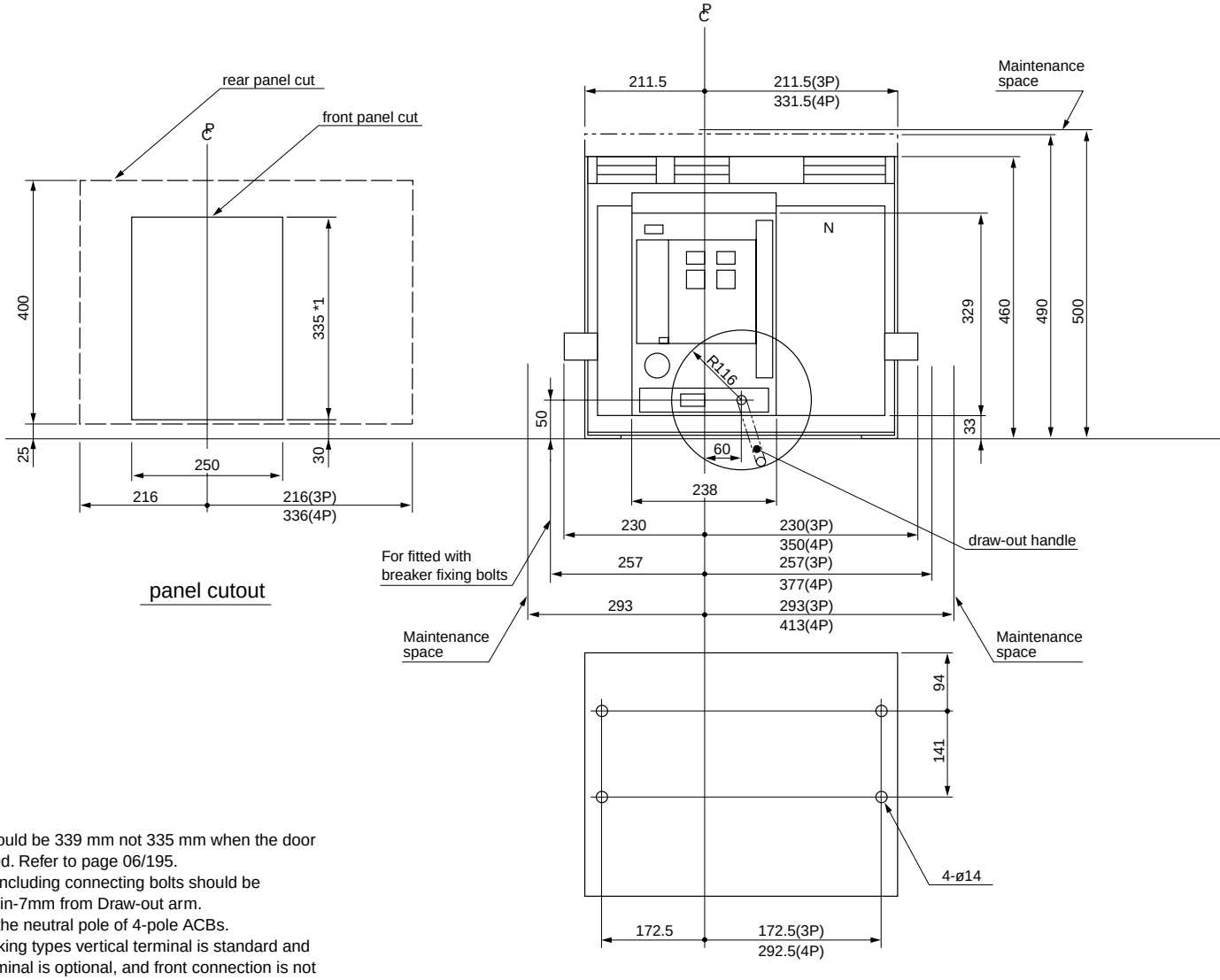

*1: Panel cut should be 339 mm not 335 mm when the door flange is used. Refer to page 06/195.
*2: Conductors including connecting bolts should be separated min-7mm from Draw-out arm.
• N represents the neutral pole of 4-pole ACBs.
• For High breaking types vertical terminal is standard and horizontal terminal is optional, and front connection is not available.

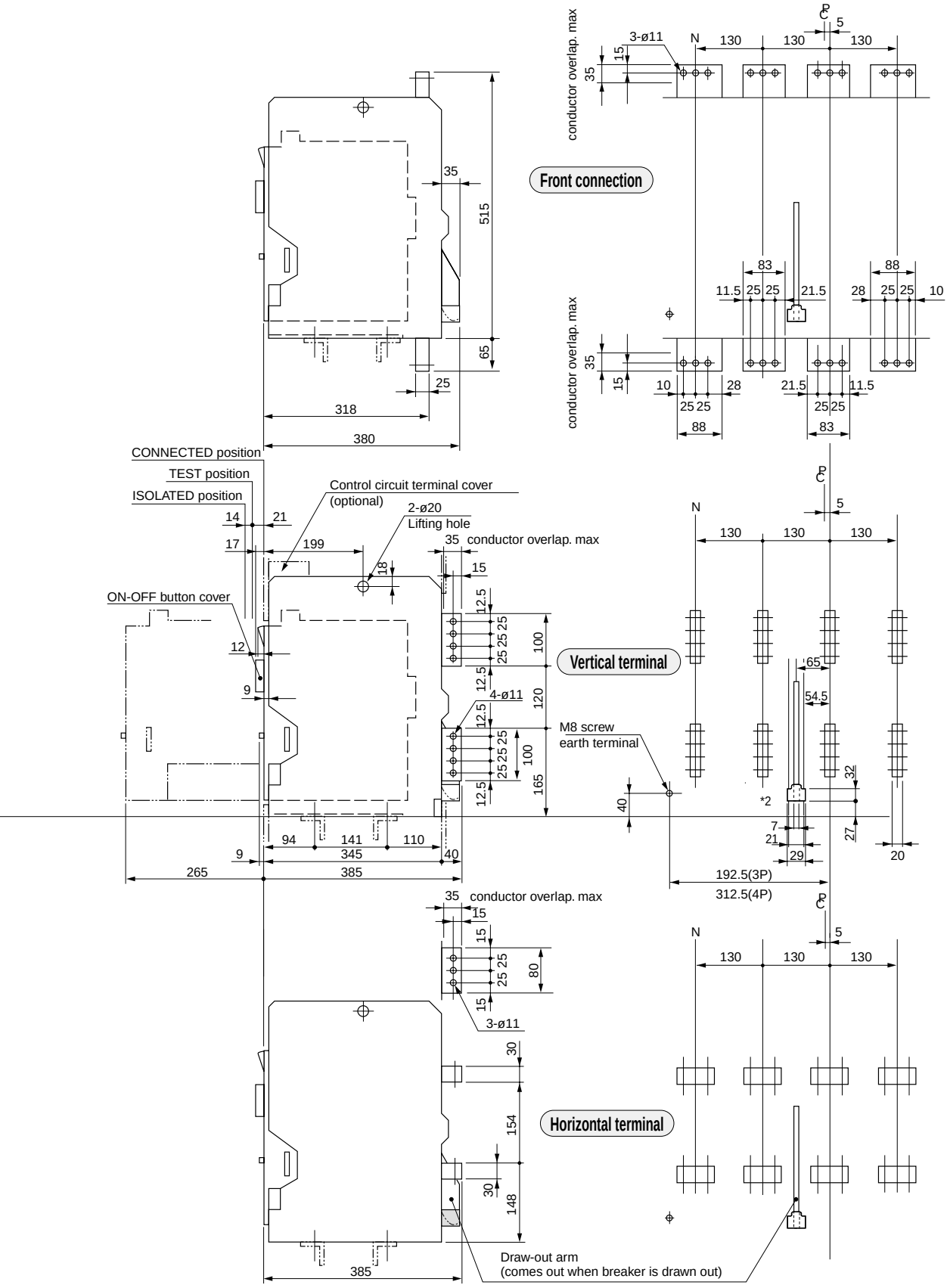
Front connection
Vertical terminal
Horizontal terminal
conductor overlap. max
3-ø11
N
P
C
130
5
515
65
35
25
318
380
83
88
11.5
21.5
28
10
CONNECTED position
TEST position
ISOLATED position
Control circuit terminal cover
(optional)
2-ø20
Lifting hole
ON-OFF button cover
14
21
17
199
18
12
9
12.5
100
120
165
4-ø11
M8 screw
earth terminal
40
94
141
110
345
265
385
65
54.5
32
*2
7
21
29
27
20
192.5(3P)
312.5(4P)
80
30
154
148
Draw-out arm
(comes out when breaker is drawn out)

06

■ **Dimensions, mm**

• **Fixed types**
DH25, DH30

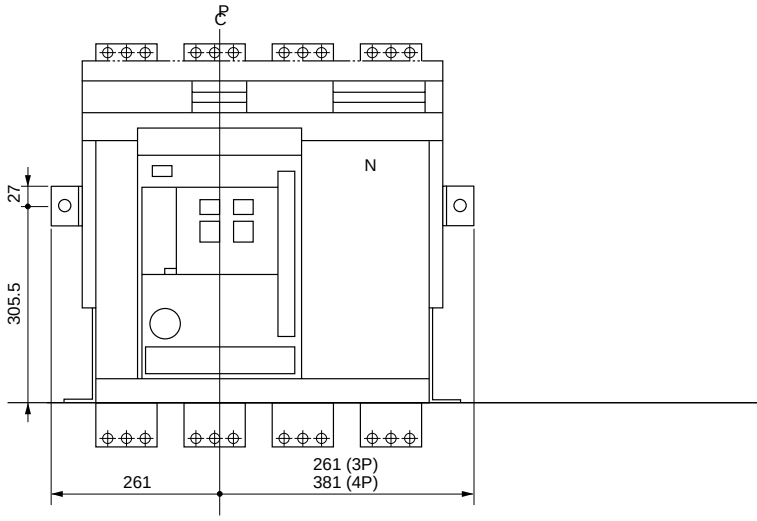

℄ : Front panel center line

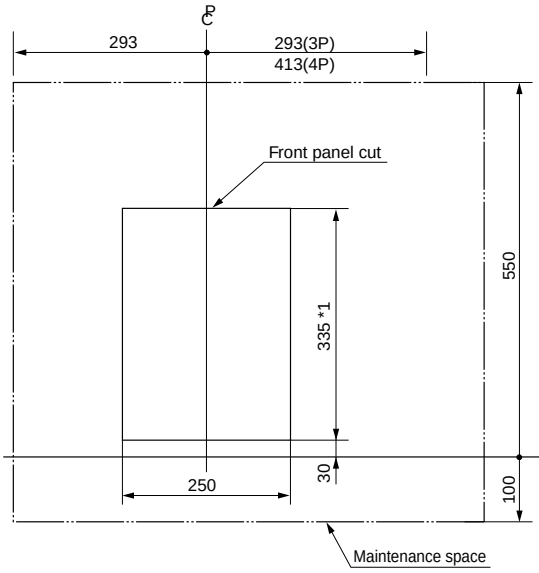

Panel cutout

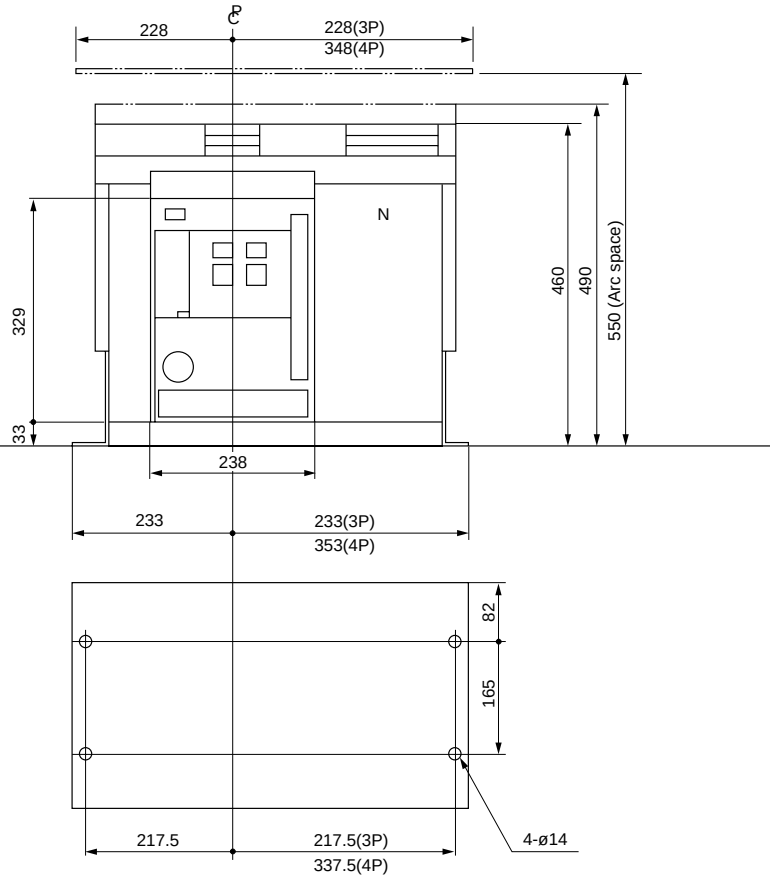

Mounting holes

*1: Panel cut should be 339 mm not 335 mm when the door flange is used. Refer to page 06/195.

• N represents the neutral pole of 4-pole ACBs.

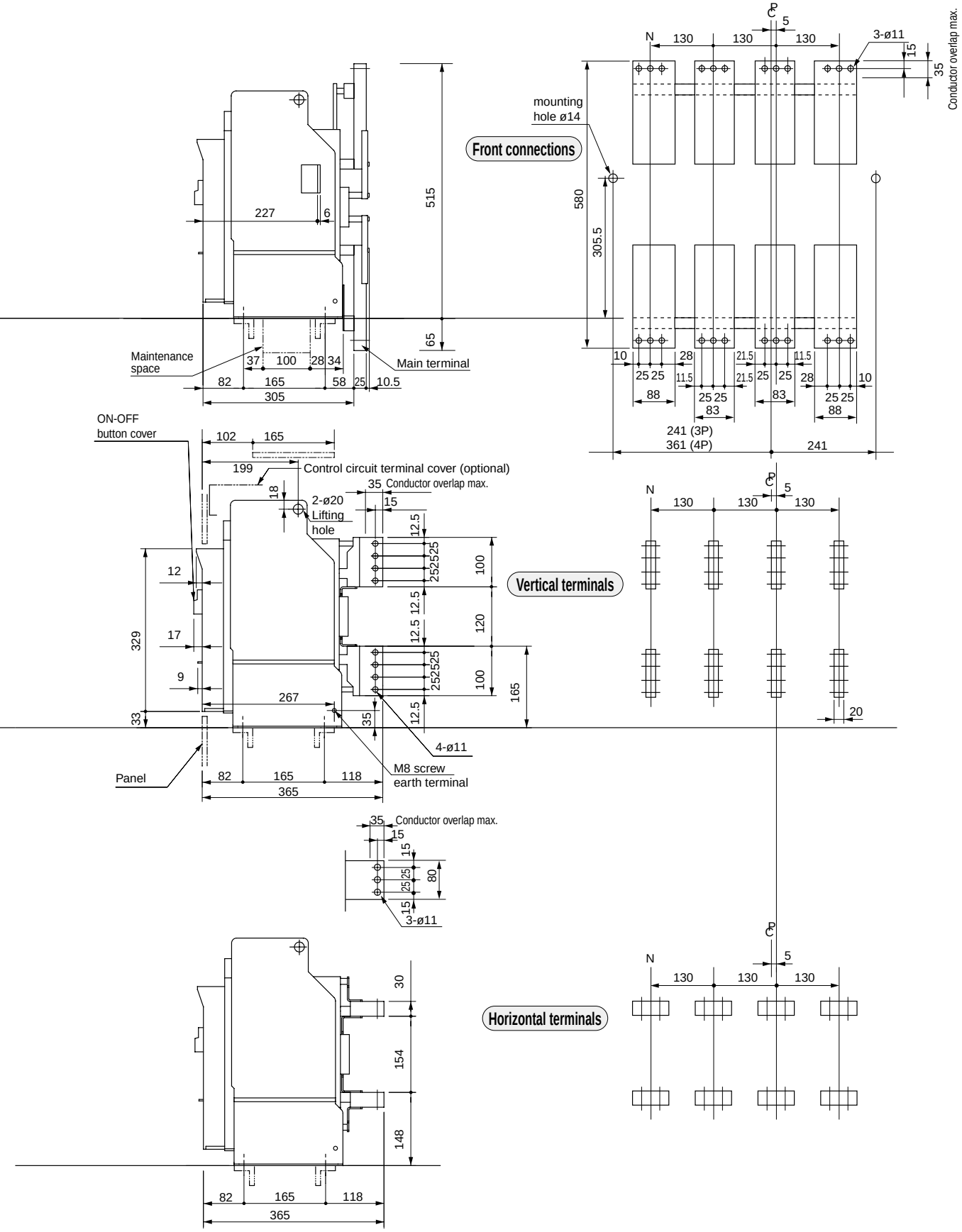
Front connections
Vertical terminals
Horizontal terminals
mounting hole ø14
3-ø11
Conductor overlap max.
Maintenance space
Main terminal
ON-OFF button cover
Control circuit terminal cover (optional)
2-ø20 Lifting hole
4-ø11
M8 screw earth terminal
Panel
241 (3P)
361 (4P)
515
580
305.5
65
227
6
305
365
329
267
241

■ **Dimensions, mm**

• **Drow-out types**

DH40

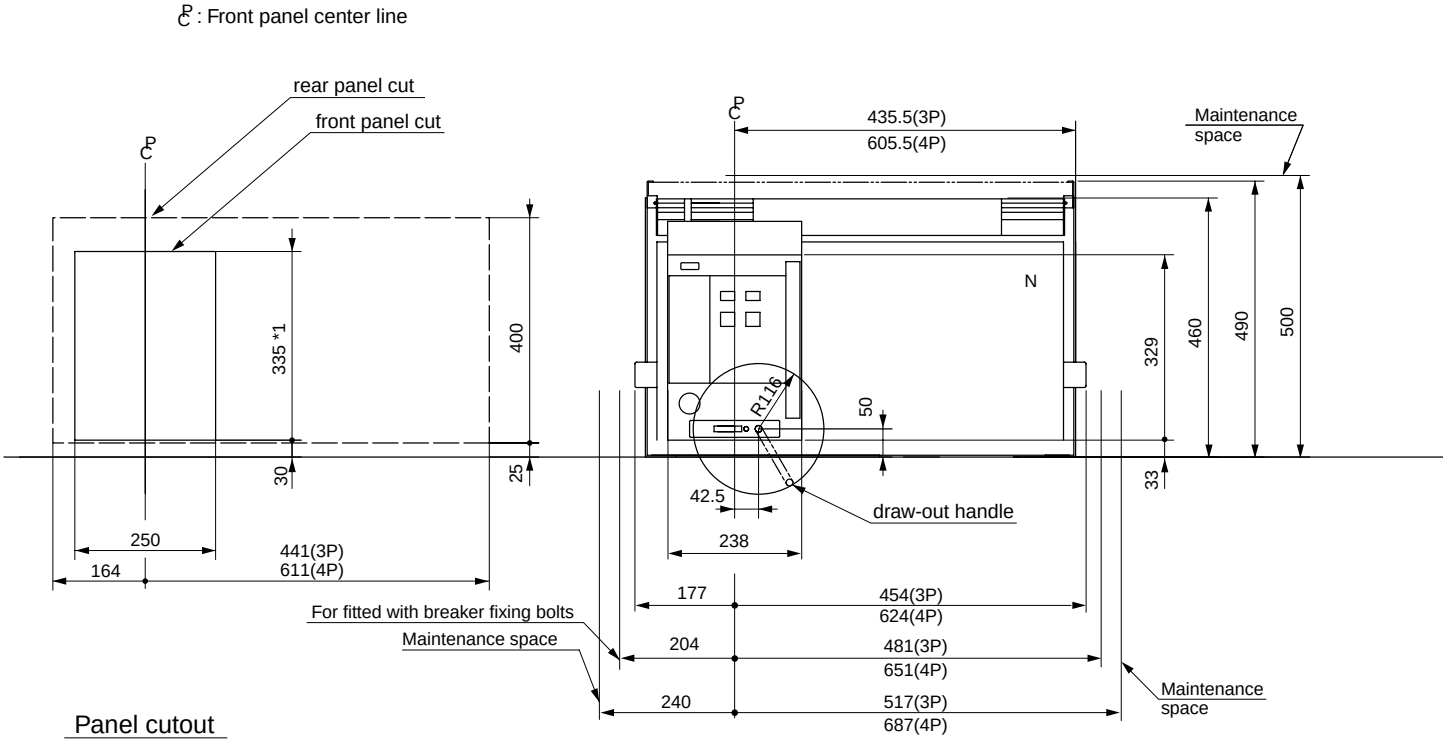

*1: Panel cut should be 339 mm not 335 mm when the door flange is used. Refer to page 06/195.

*2: Conductors including connecting bolts should be separated min-7mm from Draw-out arm.

• N represents the neutral pole of 4-pole ACBs.

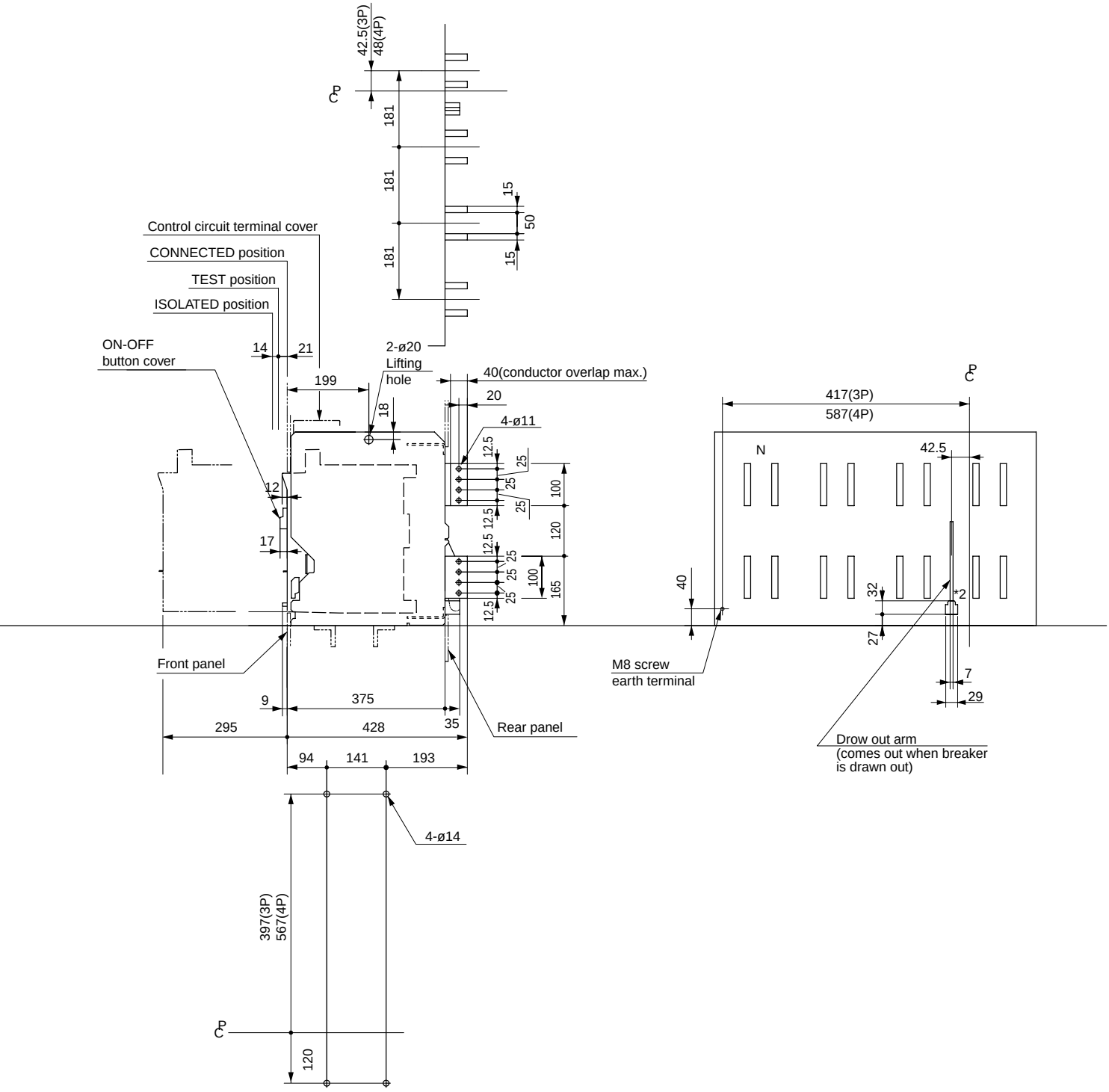
42.5(3P)
48(4P)
181
181
181
15
50
15
Control circuit terminal cover
CONNECTED position
TEST position
ISOLATED position
ON-OFF
button cover
14
21
2-ø20
Lifting
hole
40(conductor overlap max.)
199
18
20
4-ø11
12.5
25
100
120
165
12
17
Front panel
9
375
295
428
35
Rear panel
94
141
193
4-ø14
397(3P)
567(4P)
120
417(3P)
587(4P)
N
42.5
40
32
27
*2
M8 screw
earth terminal
7
29
Drow out arm
(comes out when breaker
is drawn out)

06

■ **Dimensions, mm**
• **Drow-out types**
DH50, DH60

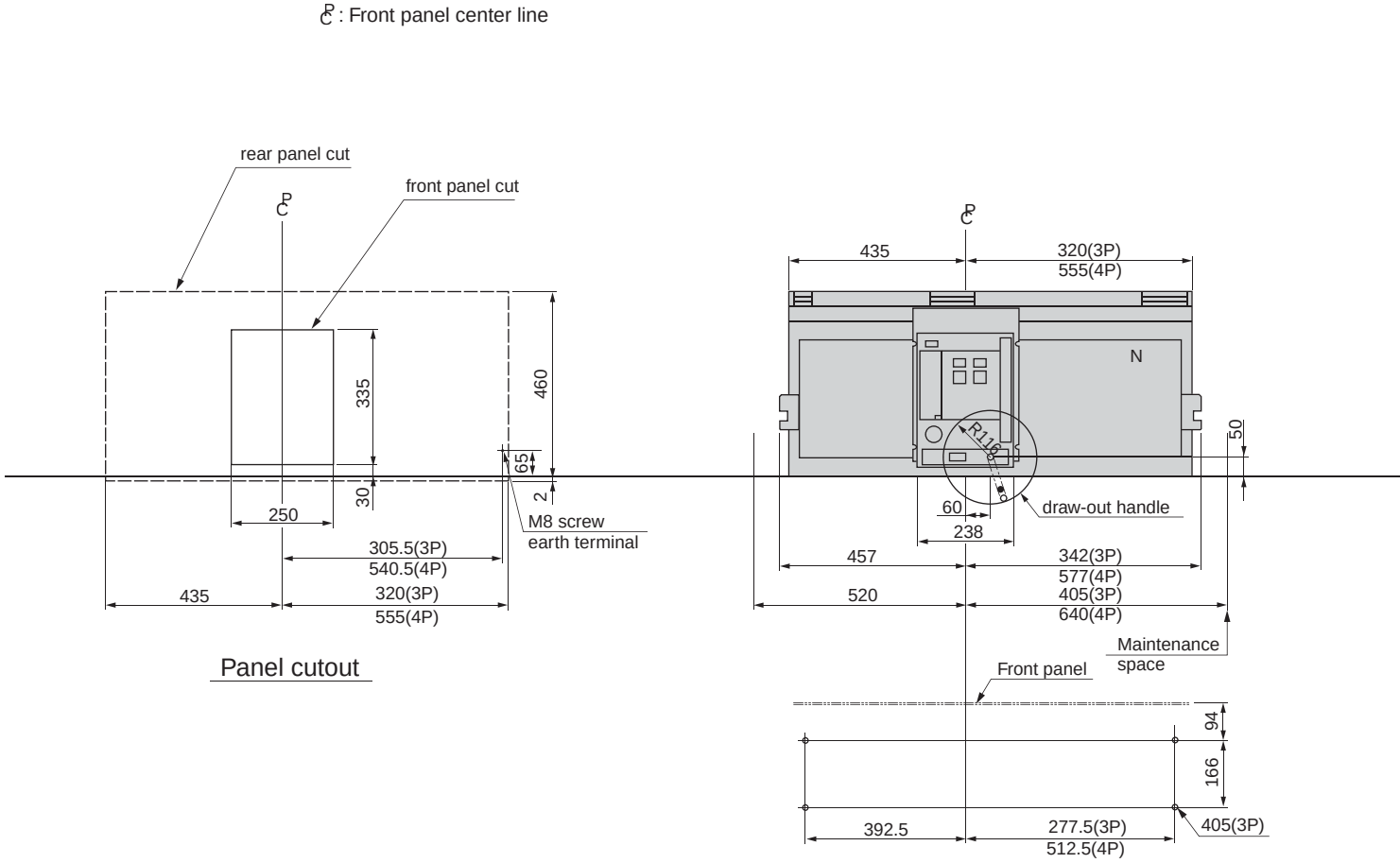

• N represents the neutral pole of 4-pole ACBs.

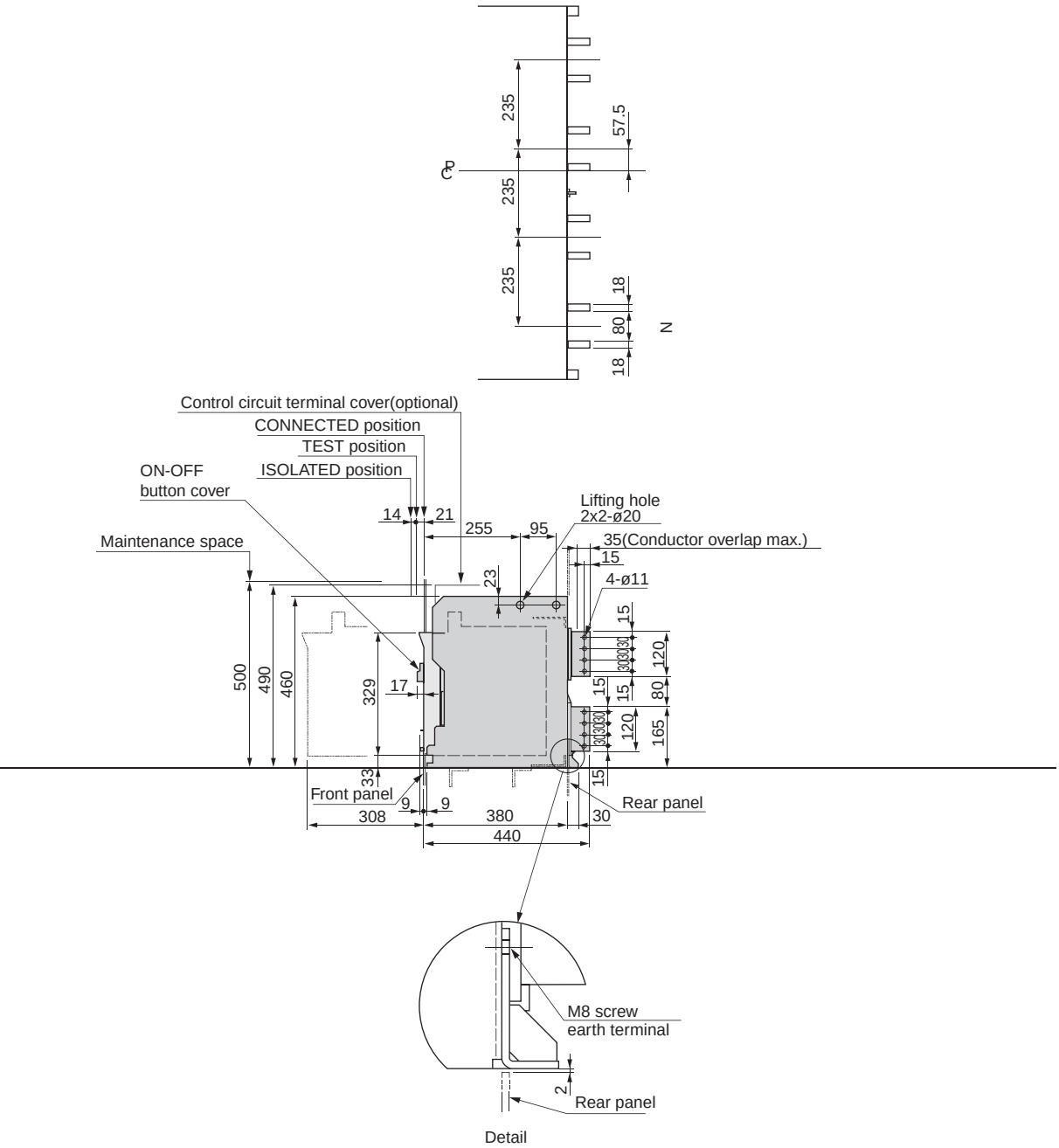
235
57.5
235
235
18
80
18
N
Control circuit terminal cover(optional)
CONNECTED position
TEST position
ISOLATED position
ON-OFF
button cover
Maintenance space
14
21
255
95
Lifting hole
2x2-ø20
35(Conductor overlap max.)
15
23
4-ø11
15
120
80
165
500
490
460
329
17
33
Front panel
9
9
308
380
30
440
Rear panel
M8 screw
earth terminal
2
Rear panel
Detail

■ Wiring diagrams (With AGR-11B OCR)

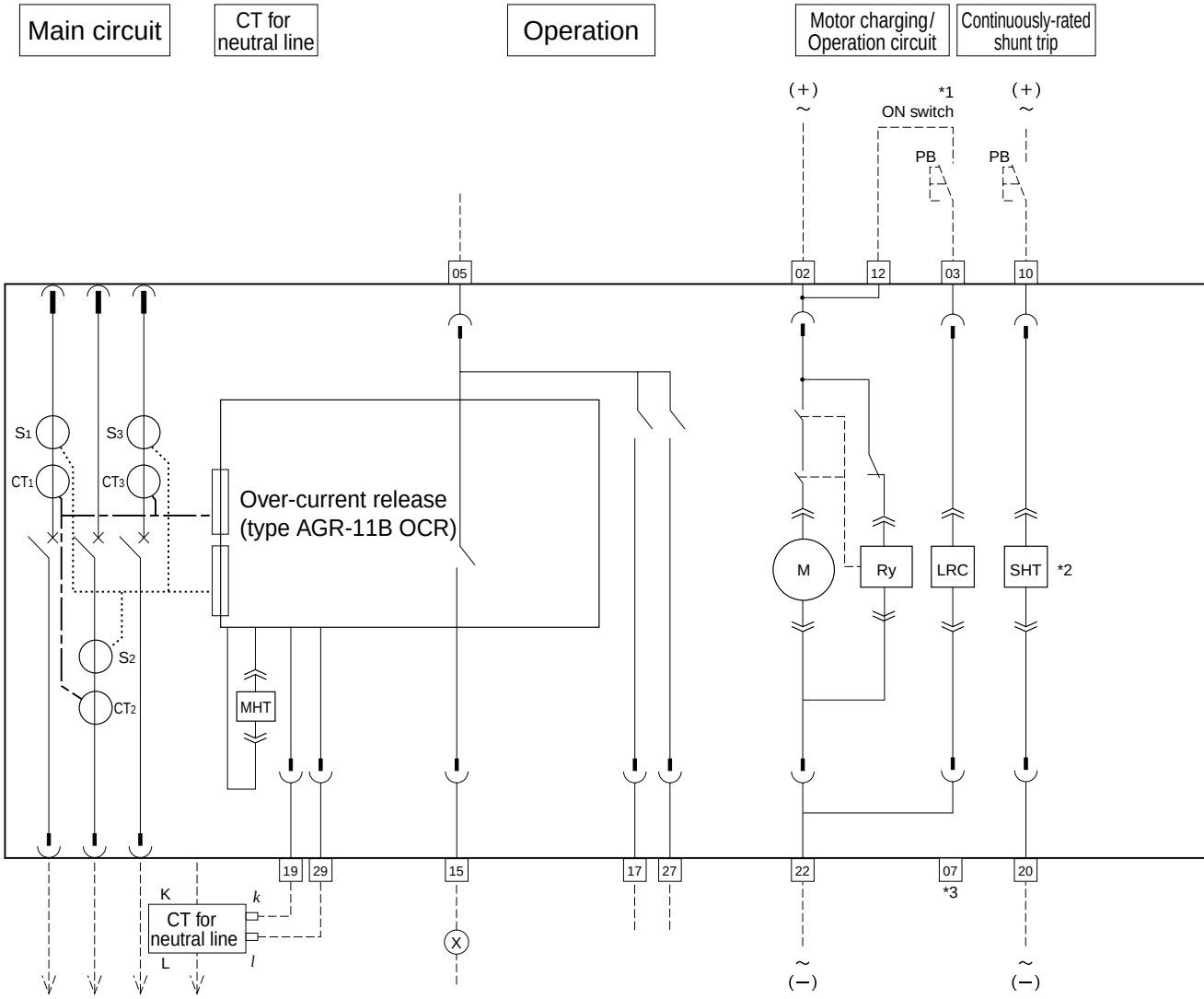

Terminal description

Check OCR voltage before connecting.
02 22 Control power supply 100-240V AC, 100-250V DC, 24V DC, 48V DC
12 Operation switch, common
03 ON switch
05 Operation indication terminal, common
15 Single-contact indication
17 Trip indication
27 Spring charge indicator
10 20 Continuously-rated shunt trip
19 Separate CT for neutral line (*k*)
29 Separate CT for neutral line (*l*)
08 18 28 UVT power supply
09 UVT power supply common

UVT power supply

Term. No.	AC 100V unit	AC 200V unit	AC 400V unit
08 - 09	100V	200V	380V
18 - 09	110V	220V	415V
28 - 09	120V	240V	440V

Symbols for accessories

CT1 - CT3 : Power CTs
S1 - S3 : Current sensors
M : Charging motor
LRC : Latch release coil
MHT : Magnetic Hold Trigger
Isolating terminal connector (for draw-out type)
Manual connector
User wiring
Relay or indicator lamp

*1: Do not connect "b"contact of auxiliary switch to ON switch in series, otherwise, pumping may occur.
*2: See page 06/177 for the circuit diagram of the continuously-rated shunt trip device with capacitor trip device.
*3: For motor split circuit, terminals 02, 22 and 03, 07 are used for charging and closing operation respectively. (Please specify when ordering)
*4: Refer to page 06/178 (short pulse only)

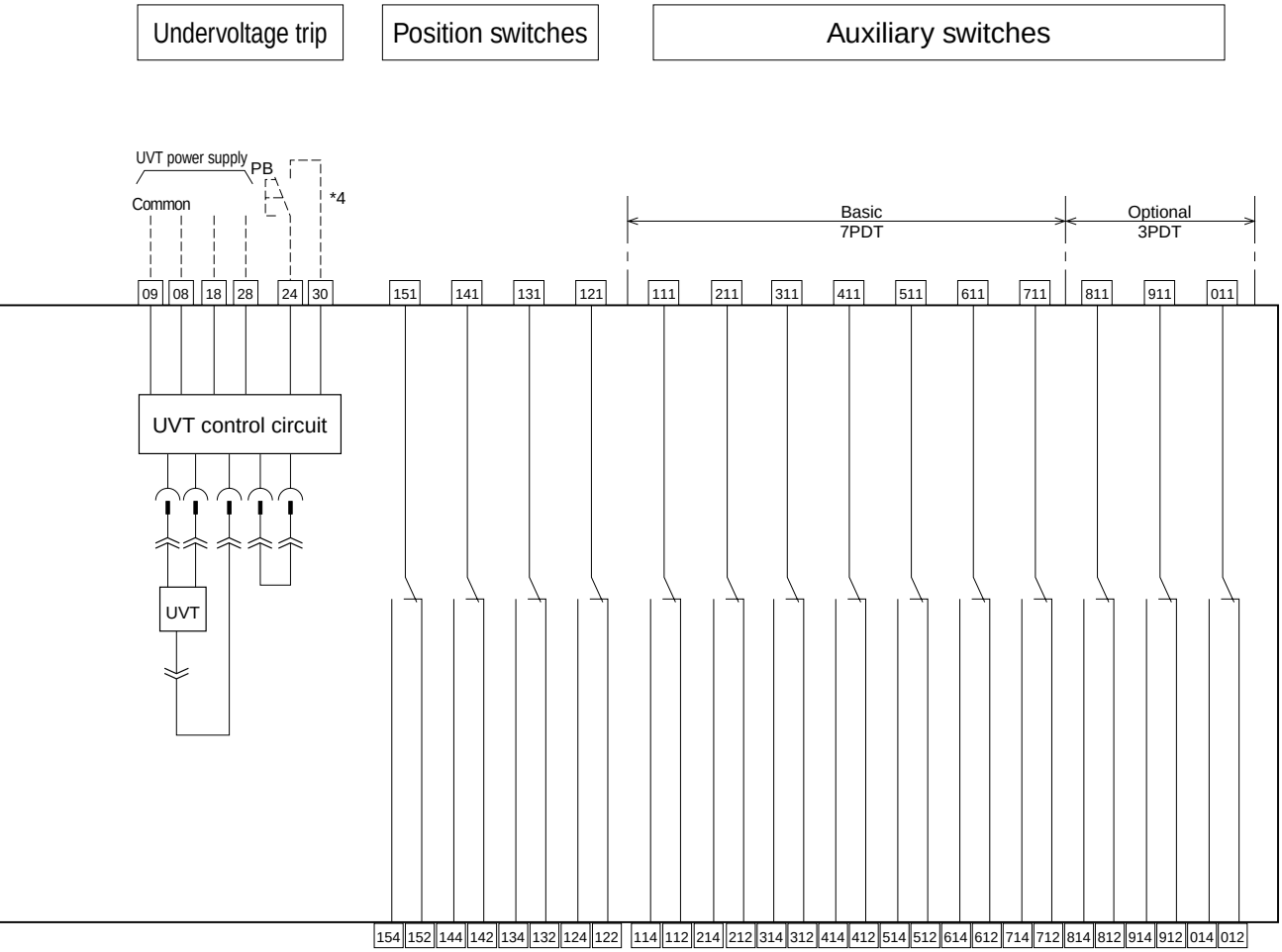

Designation of terminals for auxiliary and position switches

* * *
- 1: Common
- 2: b-contact
- 4: a-contact

- 1: Auxiliary switch
- 2: Position switch (for CONNECTED)
- 3: Position switch (for TEST)
- 4: Position switch (for ISOLATED)
- 5: Position switch (for INSERT)

- 1 – 0: Switch numbers
- A, B, C: Auxiliary switches for microload

CONNECTED position	: 121–124 ON 121–122 OFF
TEST position	: 131–134 ON 131–132 OFF
ISOLATED position	: 141–144 ON 141–142 OFF
INSERT position	: 151–154 ON 151–152 OFF

For operation sequence of position switches, see page 06/198.

Position switches

Top	151	141	131	121
Middle	154	144	134	124
Bottom	152	142	132	122

Top	131	121
Middle	134	124
Bottom	132	122

Operation/control circuits

01	02	03	04	05	06	07	08	09	10
11	12	13	14	15	16	17	18	19	20
21	22	23	24	25	26	27	28	29	30

Auxiliary switches

(Standard 7PDT + optional 3PDT arrangement)

111	211	311	411	511	611	711	811	911	011
114	214	314	414	514	614	714	814	914	014
112	212	312	412	512	612	712	812	912	012

(Standard 7PDT arrangement)

111	211	311	411	511	611	711
114	214	314	414	514	614	714
112	212	312	412	512	612	712

■ Wiring diagrams (With AGR-21B OCR)

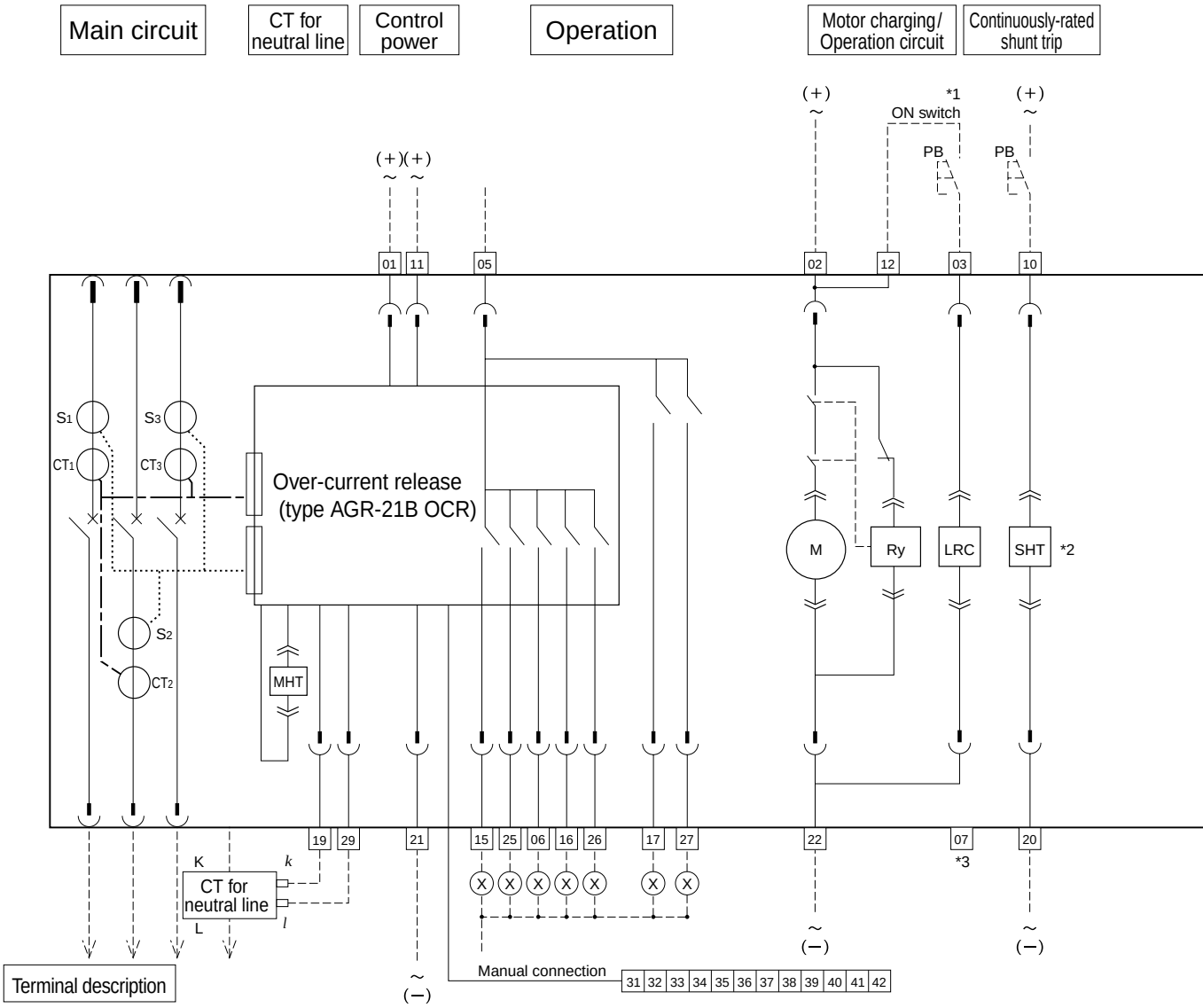

Check OCR voltage before connecting.

- 01 21 Control power supply 200 - 240V AC, 200 - 250V DC, 48V DC
- 01 11 Control power supply 100 - 120V AC
- 11 21 Control power supply 100 - 125V AC, 24V DC
- 02 22 Control power supply 100 - 240V AC, 100 - 250V DC, 24V DC, 48V DC
- 12 Operation switch, common
- 03 ON switch
- 05 Operation indication terminal, common
- 15 LT trip indication
- 25 ST, INST trip indication
- 06 PTA indication
- 16 GF trip indication
- 26 System alarm indication
- 17 REF, NS or trip indication
- 27 PTA2, UV or spring charge indication
- 10 20 Continuously-rated shunt trip
- 19 Separate CT for neutral line (*k*)
- 29 Separate CT for neutral line (*l*)
- 08 18 28 UVT power supply
- 09 UVT power supply common
- 35 Separate CT for REF (*k*)
- 36 Separate CT for REF (*l*)
- 41 42 Communication line

UVT power supply

Term. No.	100V AC unit	200V AC unit	400V AC unit
08 - 09	100V	200V	380V
18 - 09	110V	220V	415V
28 - 09	120V	240V	440V

Symbols for accessories

CT1 - CT3 : Power CTs
S1 - S3 : Current sensors
M : Charging motor
LRC : Latch release coil
MHT : Magnetic Hold Trigger
Isolating terminal connector (for draw-out type)
Manual connector
User wiring
Relay or indicator lamp

*1: Do not connect "b"contact of auxiliary switch to ON switch in series, otherwise, pumping may occur.
*2: See page 06/177 for the circuit diagram of the continuously-rated shunt trip device with capacitor trip device.
*3: For motor split circuit, terminals 02, 22 and 03, 07 are used for charging and closing operation respectively. (Please specify when ordering)
*4: Refer to page 06/178 (short pulse only)

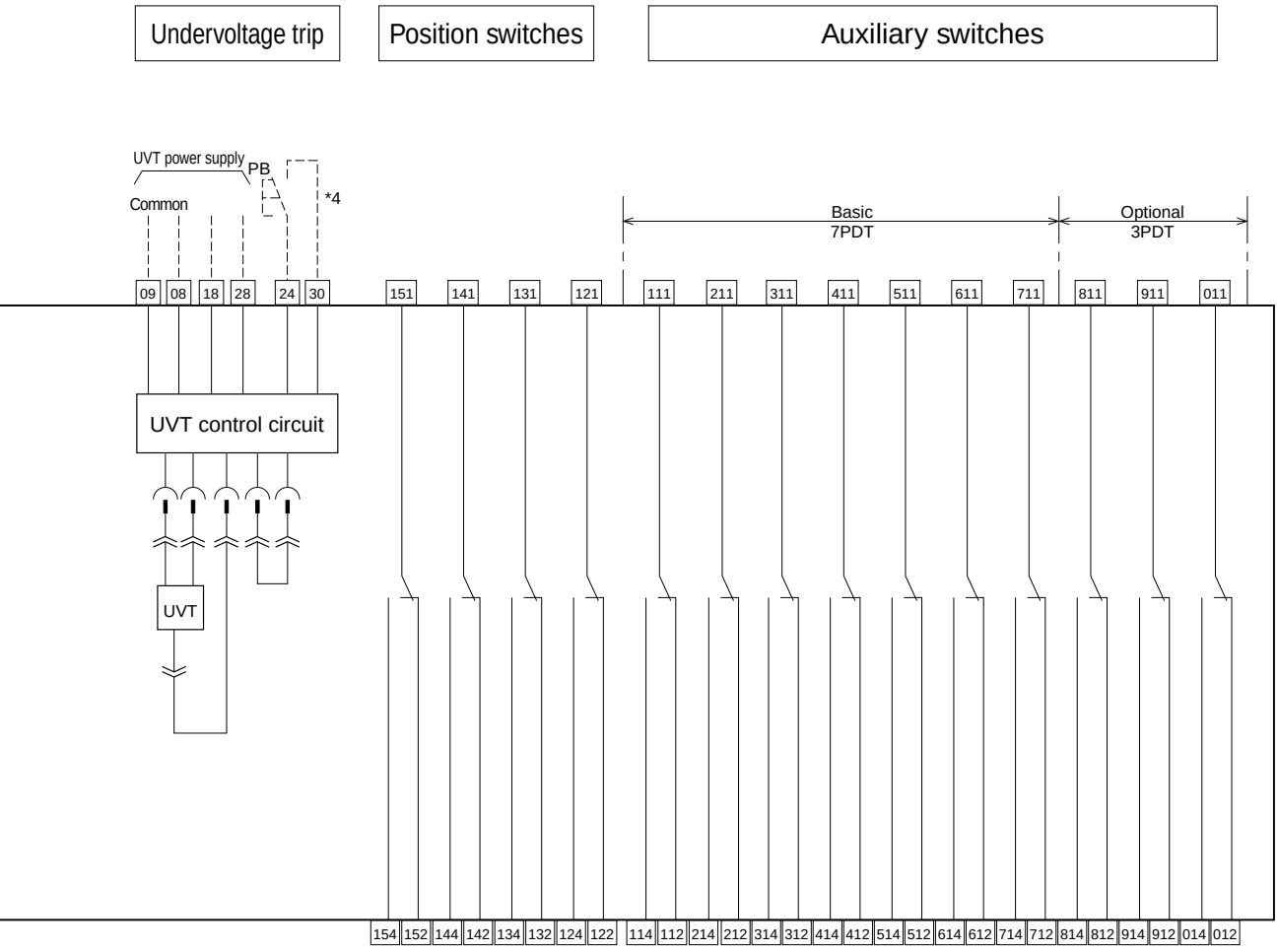

Designation of terminals for auxiliary and position switches

* * *

- 1: Common
- 2: b-contact
- 4: a-contact

- 1: Auxiliary switch
- 2: Position switch (for CONNECTED)
- 3: Position switch (for TEST)
- 4: Position switch (for ISOLATED)
- 5: Position switch (for INSERT)

- 1 – 0: Switch numbers
- A, B, C: Auxiliary switches for microload

CONNECTED position	: 121–124 ON 121–122 OFF
TEST position	: 131–134 ON 131–132 OFF
ISOLATED position	: 141–144 ON 141–142 OFF
INSERT position	: 151–154 ON 151–152 OFF

For operation sequence of
position switches, see page 06/198.

Position switches

Top	151	141	131	121
Middle	154	144	134	124
Bottom	152	142	132	122

Top	131	121
Middle	134	124
Bottom	132	122

Operation/control circuits

01	02	03	04	05	06	07	08	09	10
11	12	13	14	15	16	17	18	19	20
21	22	23	24	25	26	27	28	29	30

Auxiliary switches

(Standard 7PDT + optional 3PDT arrangement)

111	211	311	411	511	611	711	811	911	011
114	214	314	414	514	614	714	814	914	014
112	212	312	412	512	612	712	812	912	012

(Standard 7PDT arrangement)

111	211	311	411	511	611	711
114	214	314	414	514	614	714
112	212	312	412	512	612	712

31	32	33	34	35	36	37	38	39	40	41	42

Manual connection

If the ground fault protection on the line side or communication function is incorporated, control circuit terminals are of manual connection type.

■ Wiring diagrams (With AGR-22B, 31B OCR)

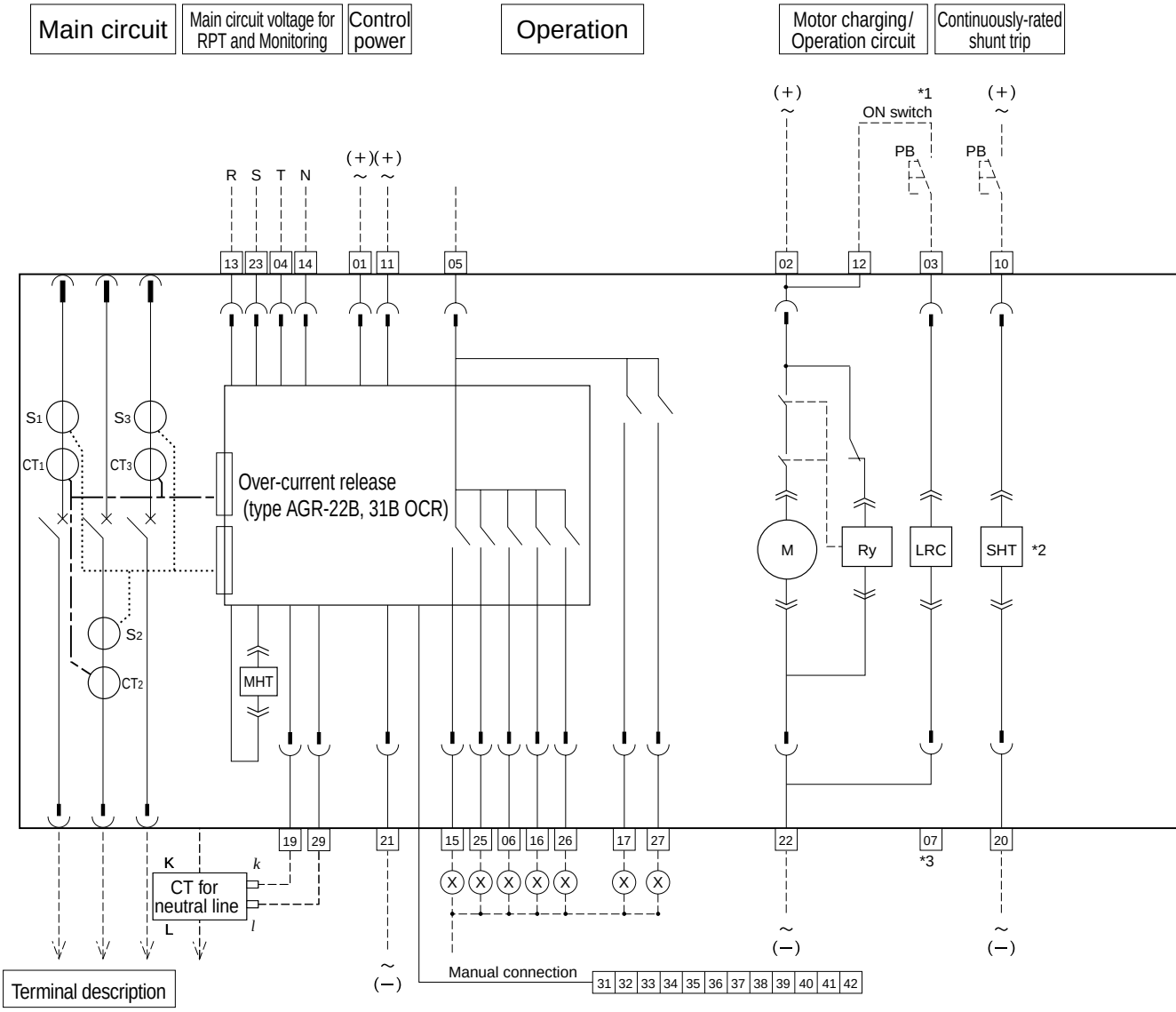

Terminal description

Check OCR voltage before connecting.

- 01 21 Control power supply 200 - 240V AC, 200 - 250V DC, 48V DC
- 01 11 Control power supply 100 - 120V AC
- 11 21 Control power supply 100 - 125V AC, 24V DC
- 02 22 Control power supply 100 - 240V AC, 100 - 250V DC, 24V DC, 48VDC
- 12 Operation switch, common
- 03 ON switch
- 05 Operation indication terminal, common
- 15 LT trip indication
- 25 ST, INST trip indication
- 06 PTA indication
- 16 GF trip indication
- 26 System alarm indication
- 17 REF, NS or trip indication
- 27 PTA2, UV or spring charge indication
- 10 20 Continuously-rated shunt trip
- 19 Separate CT for neutral line (*k*)
- 29 Separate CT for neutral line (*l*)
- 08 18 28 UVT power supply
- 09 UVT power supply common
- 35 Separate CT for REF (*k*)
- 36 Separate CT for REF (*l*)
- 41 42 Communication line

UVT power supply

Term. No.	100V AC unit	200V AC unit	400V AC unit
08 - 09	100V	200V	380V
18 - 09	110V	220V	415V
28 - 09	120V	240V	440V

Symbols for accessories

CT1 - CT3 : Power CTs
S1 - S3 : Current sensors
M : Charging motor
LRC : Latch release coil
MHT : Magnetic Hold Trigger
Isolating terminal connector (for draw-out type)
Manual connector
User wiring
Relay or indicator lamp

*1: Do not connect "b"contact of auxiliary switch to ON switch in series, otherwise, pumping may occur.
*2: See page 06/177 for the circuit diagram of the continuously-rated shunt trip device with capacitor trip device.
*3: For motor split circuit, terminals 02, 22 and 03, 07 are used for charging and closing operation respectively. (Please specify when ordering)
*4: Refer to page 06/178 (short pulse only)

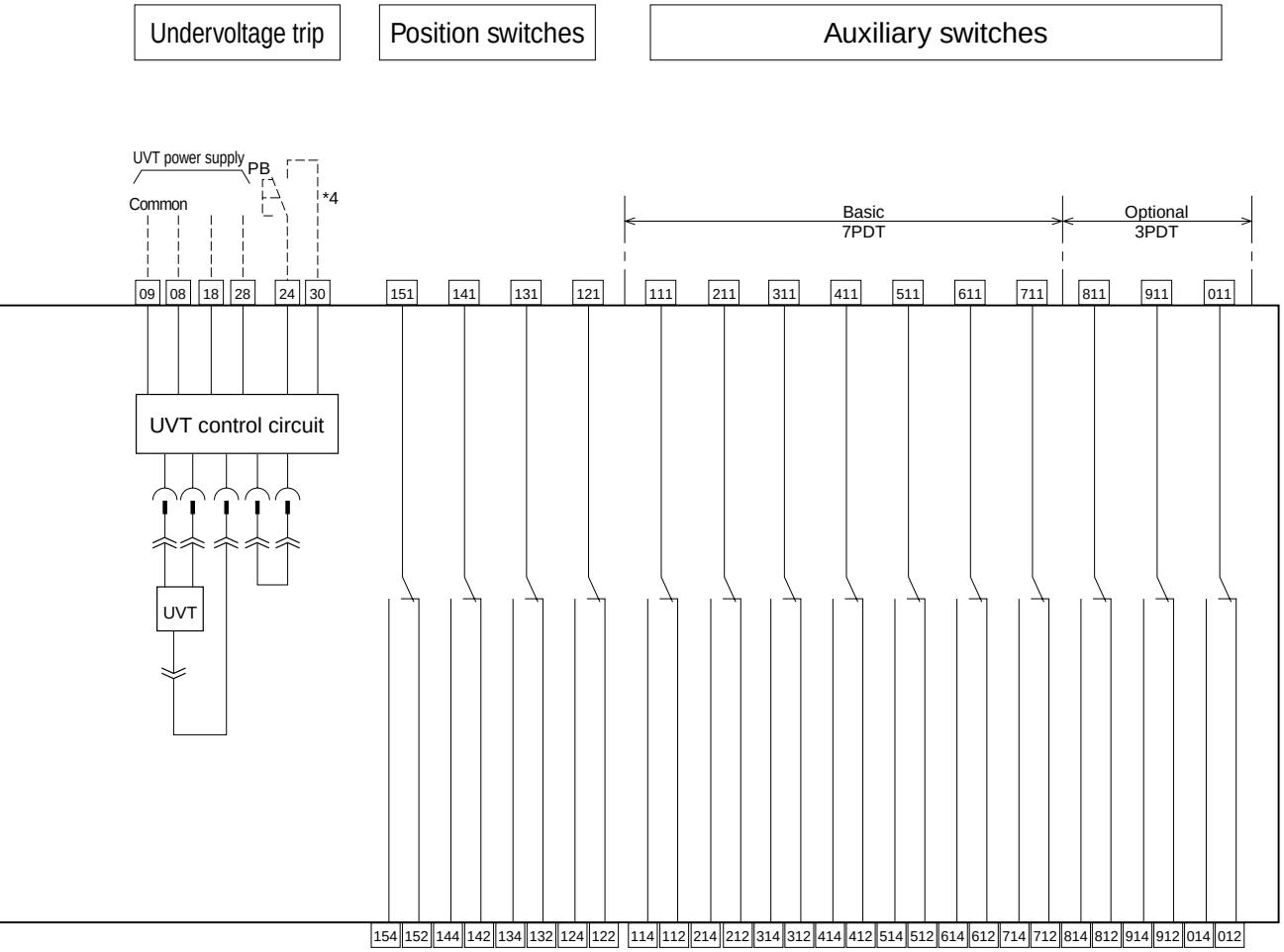

Designation of terminals for auxiliary and position switches

* * *
- 1: Common
- 2: b-contact
- 4: a-contact

- 1: Auxiliary switch
- 2: Position switch (for CONNECTED)
- 3: Position switch (for TEST)
- 4: Position switch (for ISOLATED)
- 5: Position switch (for INSERT)

- 1 – 0: Switch numbers
- A, B, C: Auxiliary switches for microload

CONNECTED position	: 121–124 ON
	121–122 OFF
TEST position	: 131–134 ON
	131–132 OFF
ISOLATED position	: 141–144 ON
	141–142 OFF
INSERT position	: 151–154 ON
	151–152 OFF

For operation sequence of position switches, see page 06/198.

Position switches

Top	151	141	131	121
Middle	154	144	134	124
Bottom	152	142	132	122

Top	131	121
Middle	134	124
Bottom	132	122

Operation/control circuits

01	02	03	04	05	06	07	08	09	10
11	12	13	14	15	16	17	18	19	20
21	22	23	24	25	26	27	28	29	30

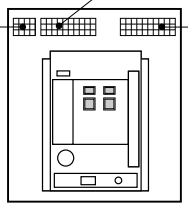

Auxiliary switches

(Standard 7PDT + optional 3PDT arrangement)

111	211	311	411	511	611	711	811	911	011
114	214	314	414	514	614	714	814	914	014
112	212	312	412	512	612	712	812	912	012

(Standard 7PDT arrangement)

111	211	311	411	511	611	711
114	214	314	414	514	614	714
112	212	312	412	512	612	712

31	32	33	34	35	36	37	38	39	40	41	42

Manual connection

If the ground fault protection is incorporated and a separate current transformer for neutral line is used, or any one of ground fault protection on the line side, zone interlock, external display or communication function is incorporated, control circuit terminals are of manual connection type.

Catalog Disclaimer

The information contained in this catalog does not constitute an express or implied warranty of quality, any warranty of merchantability of fitness for a particular purpose is hereby disclaimed.

Since the user's product information, specific use application, and conditions of use are all outside of Fuji Electric FA Components & Systems'control, **it shall be the responsibility of the user to determine the suitability of any of the products mentioned for the user's application.**

One Year Limited Warranty

The products identified in this catalog shall be sold pursuant to the terms and conditions identified in the "Conditions of Sale" issued by Fuji Electric FA with each order confirmation.

Except to the extent otherwise provided for in the Conditions of Sale issued by Fuji Electric FA, Fuji Electric FA warrants that the Fuji Electric FA products identified in this catalog shall be free from significant defects in materials and workmanship provided the product has not been: 1) repaired or altered by others than Fuji Electric FA; 2) subjected to negligence, accident, misuse, or damage by circumstances beyond Fuji Electric FA's control; 3) improperly operated, maintained or stored; or 4) used in other than normal use or service. This warranty shall apply only to defects appearing within one (1) year from the date of shipment by Fuji Electric FA, and in such case, only if such defects are reported to Fuji Electric FA within thirty (30) days of discovery by purchaser. Such notice should be submitted in writing to Fuji Electric FA at 5-7, Nihonbashi Odemma-cho, Chuo-ku, Tokyo, Japan. The sole and exclusive remedy with respected to the above warranty whether such claim is based on warranty, contract, negligence, strict liability or any other theory, is limited to the repair or replacement of such product or, at Fuji Electric FA's option reimbursement by Fuji Electric FA of the purchase price paid to Fuji Electric FA for the particular product. **Fuji Electric FA does not make any other representations or warranties, whether oral or in writing, expressed or implied, including but not limited to any warranty regarding merchantability or fitness for a particular purpose.** Except as provided in the Conditions of Sale, no agent or representative of Fuji Electric FA is authorized to modify the terms of this warranty in writing or orally.

In no event shall Fuji Electric FA be liable for special, indirect or consequential damages, including but not limited to, loss of use of the product, other equipment, plant and power system which is installed with the product, loss of profits or revenues, cost of capital, or claims against the purchaser or user of the product by its customers resulting from the use of information, recommendations and descriptions contained herein. The purchaser agrees to pass on to its customers and users, in writing at the time inquiries and orders are received by buyer, Fuji Electric FA's warranty as set forth above.

⚠ Caution "Safety precautions"

- Operate (keep) in the environment specified in the operating instructions and manual. High temperature, high humidity, condensation, dust, corrosive gases, oil, organic solvents, excessive vibration or shock might cause electric shock, fire, erratic operation or failure.
- Follow the regulations of industrial wastes when the product is to be discarded.
- The products covered in this catalogs have not been designed or manufactured for use in equipment or systems which, in the event of failure, can lead to loss of human life.
- If you intend to use the products covered in this catalog for special applications, such as for nuclear energy control, aerospace, medical, or transportation, please consult our Fuji Electric FA agent.
- Be sure to provide protective measures when using the product covered in these catalogs in equipment which, in the event of failure, may lead to loss of human life or other grave results.
- Follow the directions of the operating instructions when mounting the product.

D&C CATALOG DIGEST INDEX

Individual catalog No.	LOW VOLTAGE PRODUCTS Up to 600 Volts
01	Magnetic Contactors and Starters Thermal Overload Relays, Solid-state Contactors
02	Manual Motor Starters and Contactors Combination Starters
03	Industrial Relays, Industrial Control Relays Annunciator Relay Unit, Time Delay Relays
04	Pushbuttons, Selector Switches, Pilot Lights Rotary Switches, Cam Type Selector Switches Panel Switches, Terminal Blocks, Testing Terminals
05	Limit Switches, Proximity Switches Photoelectric Switches
06	Molded Case Circuit Breakers Air Circuit Breakers
07	Earth Leakage Circuit Breakers Earth Leakage Protective Relays
08	Circuit Protectors Low Voltage Current-Limiting Fuses
09	Measuring Instruments, Arresters, Transducers Power Factor Controllers Power Monitoring Equipment (F-MPC)
10	AC Power Regulators Noise Suppression Filters Control Power Transformers
	HIGH VOLTAGE PRODUCTS Up to 36kV
11	Disconnecting Switches, Power Fuses Air Load Break Switches Instrument Transformers — VT, CT
12	Vacuum Circuit Breakers, Vacuum Magnetic Contactors Protective Relays

INDIVIDUAL CATALOG 06

from D&C CATALOG 20th Edition

Fuji Electric FA Components & Systems Co., Ltd.

5-7, Nihonbashi Odemma-cho, Chuo-ku, Tokyo, 103-0011, Japan

URL http://www.fujielectric.co.jp/fcs/eng

Information in this catalog is subject to change without notice.

2010-09 PDF FOLS DEC2006